THIS DRAWING AND SPECIFICATIONS, HEREIN, ARE THE PROPERTY OF INVENTEC CORPORATION AND SHALL NOT BE REPODUCED, COPIED, OR USED IN WHOLE OR IN PART AS THE BASIS FOR THE MANUFACTURE OR SALE OF ITEMS WITHOUT WRITTEN PERMISSION, INVENTEC CORPORATION 2009 ALL RIGHT RESERVED

LUKE 2.0

PV Build

www.altech1.ru

2010/02/10

DATE	CHANGE NO.	REV

	EE	DATE	POWER	DATE
DRAWER				
DESIGN				
CHECK				
RESPONSIBLE				

SIZE = 3 VER :

FILE NAME : XXXX-XXXXXX-XX

P/N XXXXXXXXXXXX

INVENTEC

TITLE *LUKE 20*

Project Name

SIZE	CODE	DOC. NUMBER	REV
A3	CS	*1310A2345303*	*A01*

SHEET 1 OF 56

Index

PAGE
01. PROJECT NAME
02. INDEX
03. Block Diagram
04. POWER Procedure
05. DC & CHARGE Circuit
06. Battery CONN
07. +V3A & +V5A
08. +V1.5 & +V0.75
09. +V1.8S
10. +VCC_CORE
11. +VGFX_CORE
12. VTT & VPCIE & VDDC_GPU
13. +V5S & +V3S
14. CLK GEN
15. CPU-1
16. CPU-2
17. CPU-3
18. CPU-4
19. CPU-5
20. CPU-6
21. Thermal, Fan & XDP
22. DDR3-1
23. DDR3-2
24. PCH-1
25. PCH-2
26. PCH-3
27. PCH-4
28. PCH-5
29. PCH-6
30. PCH-7

PAGE
31. PCH-8
32. PCH-9
33. KBC
34. Keyboard & TouchPad
35. CRT CONN
36. LCM CONN
37. HDMI CONN
38. SATA HDD & ESD BOARD*3
39. LAN
40. RJ-45
41. Card Reader
42. Audio Codec
43. HP JACK & MIC JACK
44. USB*1 & SWITCH BD CONN & SCREW
45. WLAN & BlueTooth
46. USB*2 & LID & SWITCH BOARD
47. WWAN(Option)
48. HD LOCK & ROTATE BD CONN & ROTATE BOARD
49 PARK-S3 PCIE INTERFACE
50 PARK-S3 Display and GIPO INTERFACE
51 PARK-S3 CLK and DDC INTERFACE
52 PARK-S3 POWER INTERFACE
53 PARK-S3 DP Power and LVDS INTERFACE
54 PARK-S3 Memory INTERFACE
55 VRAM-1(DDR3)
56 VRAM-2(DDR3)

www.altech1.ru

INVENTEC			
TITLE LUKE 20 Index			
SIZE A3	CODE CS	DOC. NUMBER 1310A2345303	REV A01
CHANGE by Chan, Shane	2-Feb-2010	SHEET 2 OF 56	

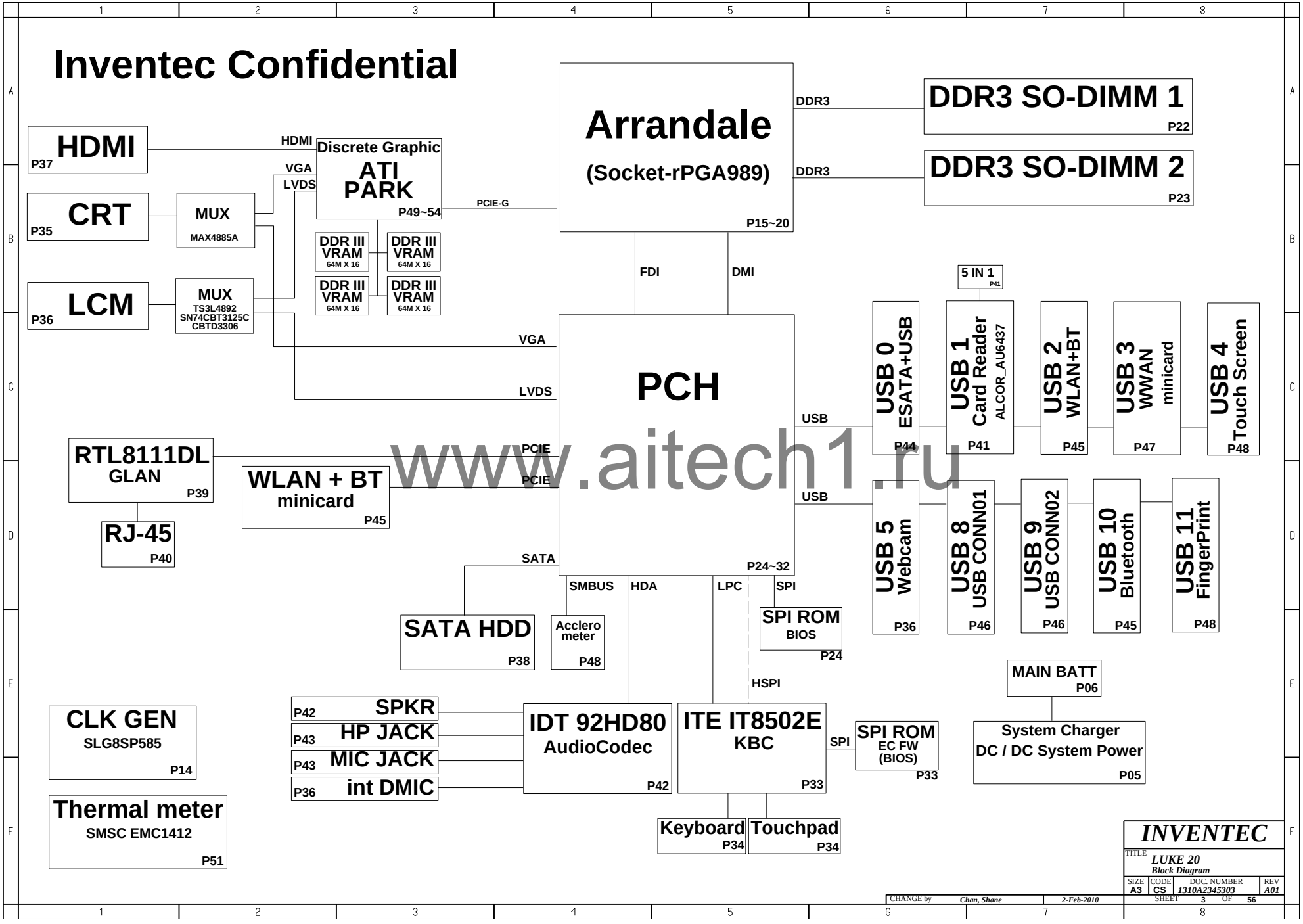

www.aitech1.ru

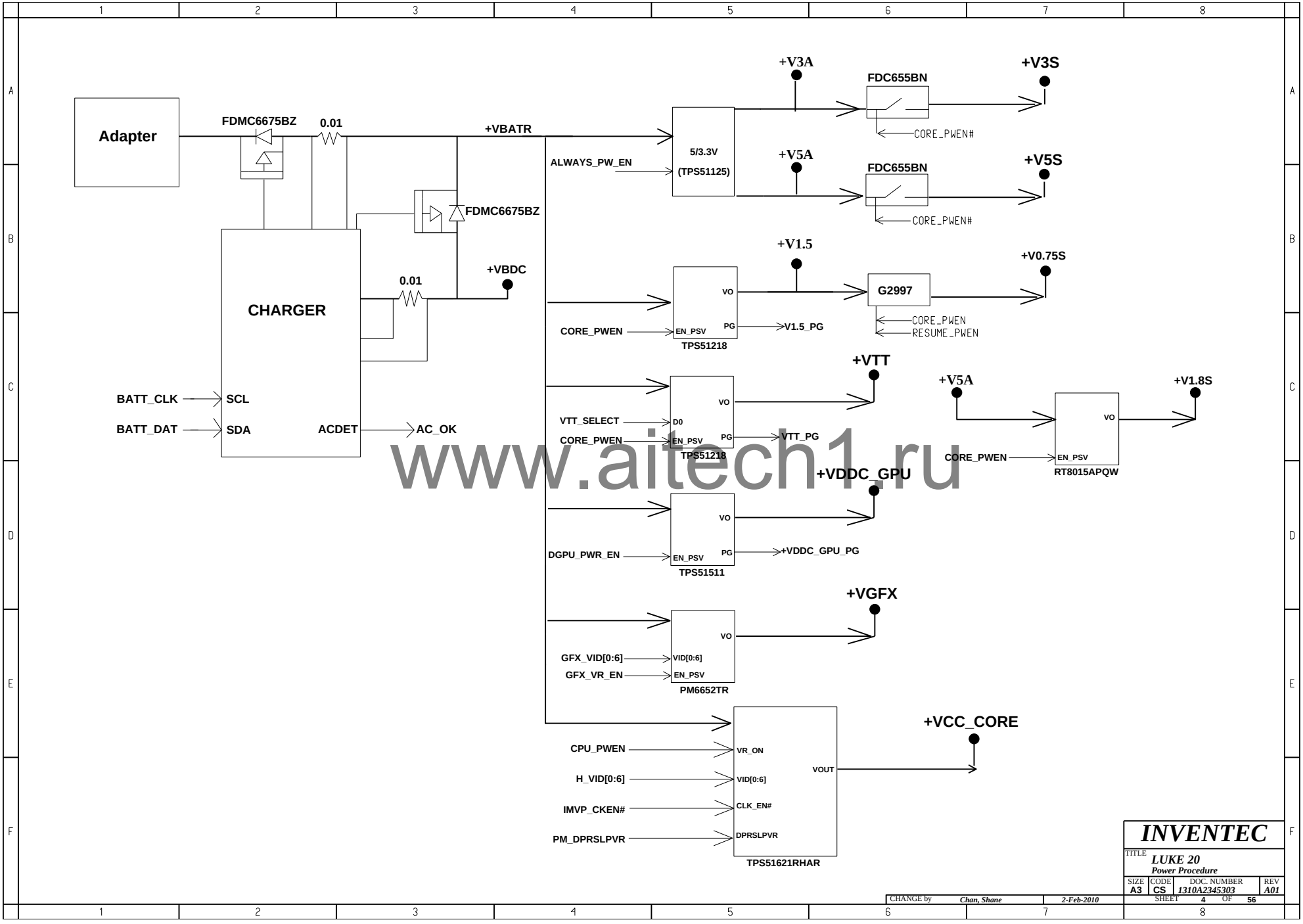

www.aitech1.ru

INVENTEC			
TITLE LUKE 20 Power Procedure			
SIZE A3	CODE CS	DOC. NUMBER 1310A2345303	REV A01
CHANGE by Chan, Shane	2-Feb-2010	SHEET 4 OF 56	

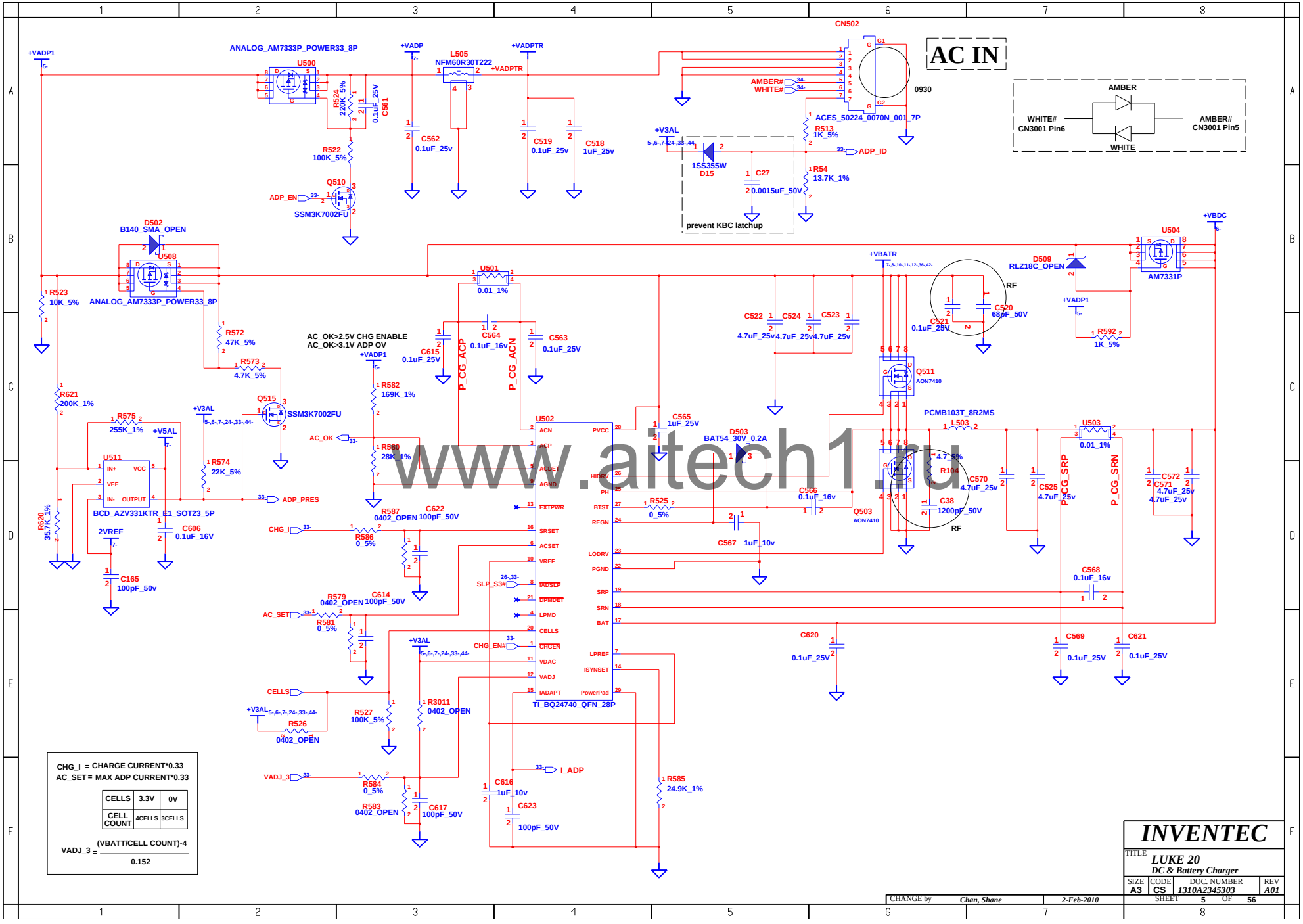

www.aitech1.ru

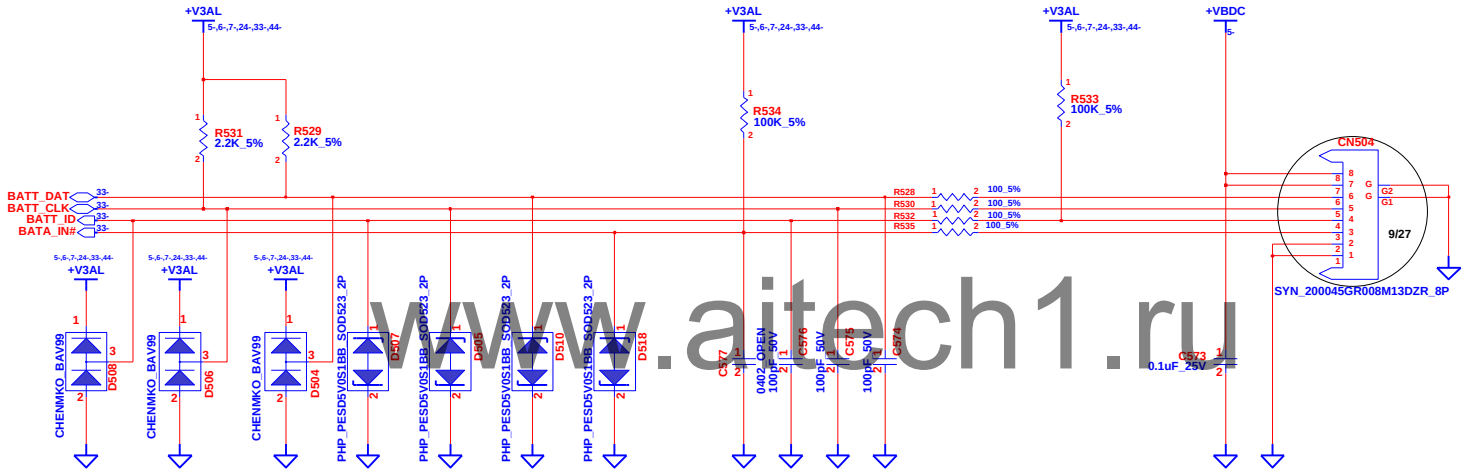

www.aitech1.ru

CHANGE by	Chan, Shane	2-Feb-2010	

INVENTEC

TITLE: *LUKE 20*
Battery CONN

SIZE	CODE	DOC. NUMBER	REV
A3	CS	1310A2345303	A01

SHEET 6 OF 56

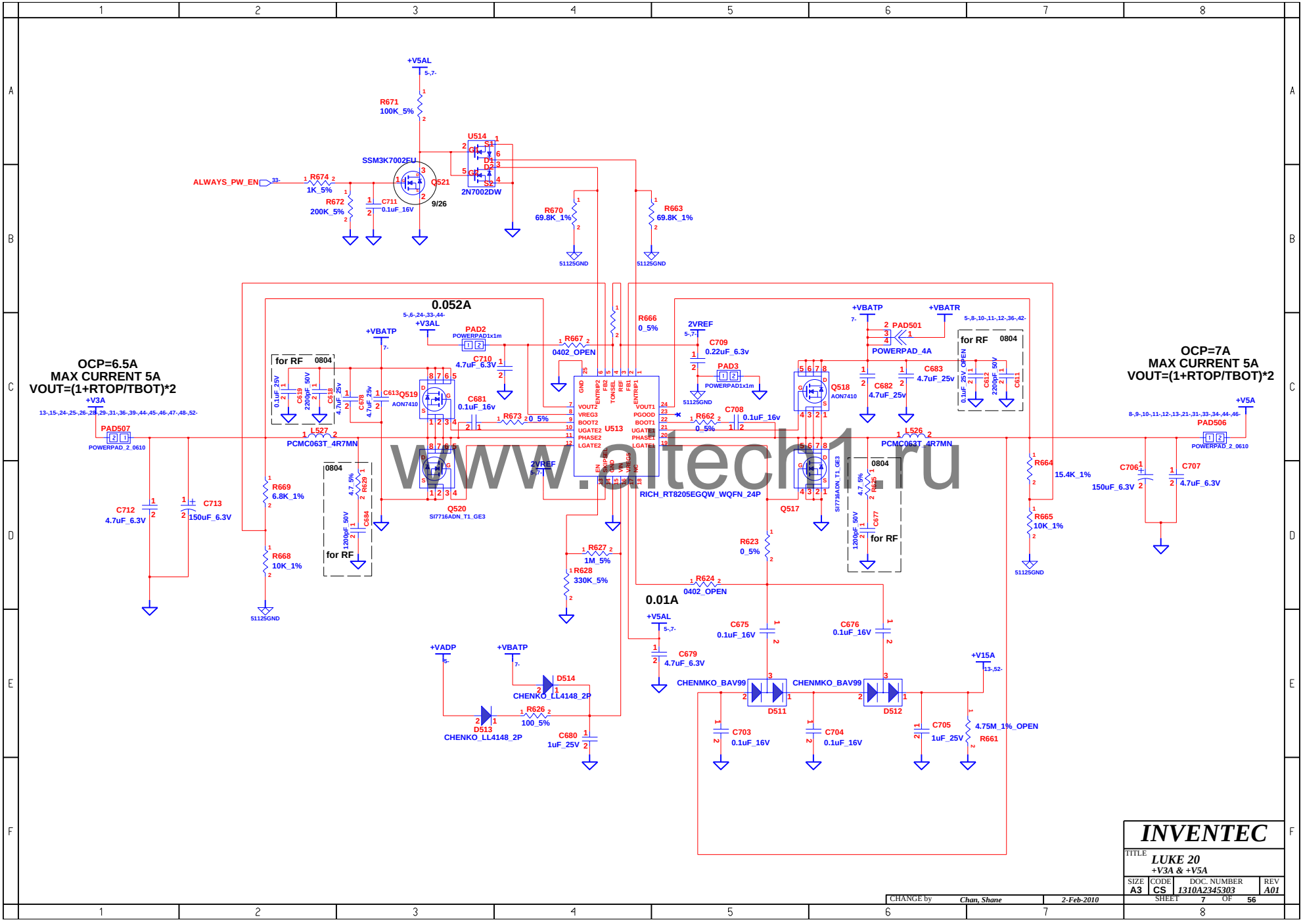

CHANGE by	Chan, Shane	2-Feb-2010	

INVENTEC

TITLE: *LUKE 20*
+V3A & +V5A

SIZE	CODE	DOC. NUMBER	REV
A3	CS	1310A2345303	A01

SHEET 7 OF 56

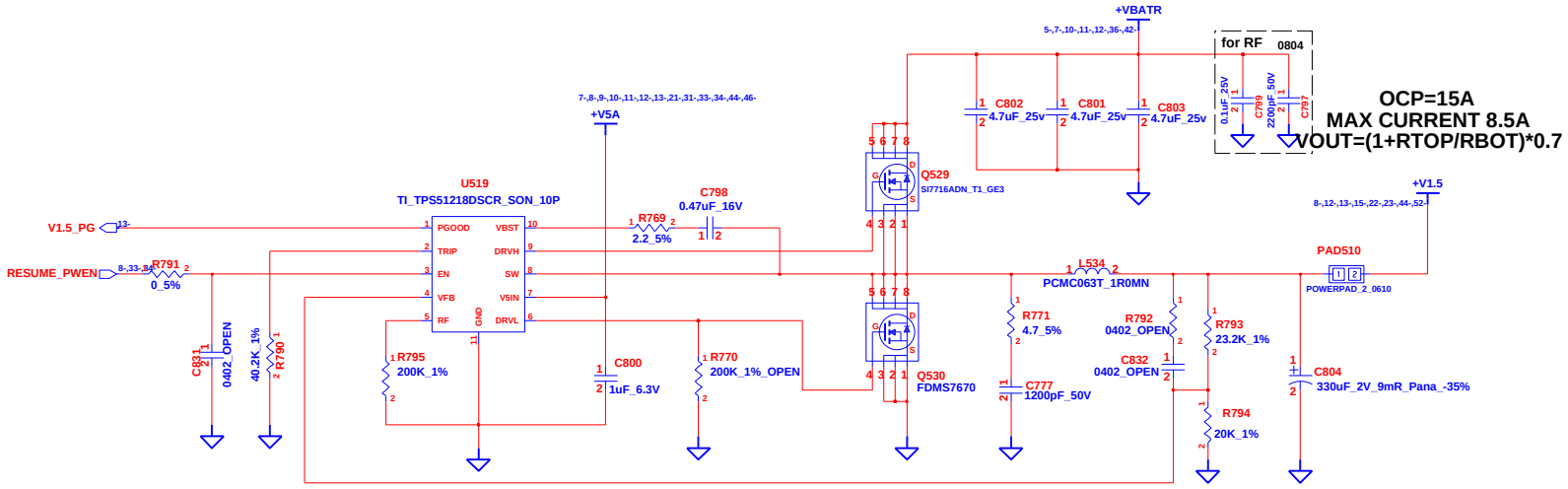

www.aitech1.ru

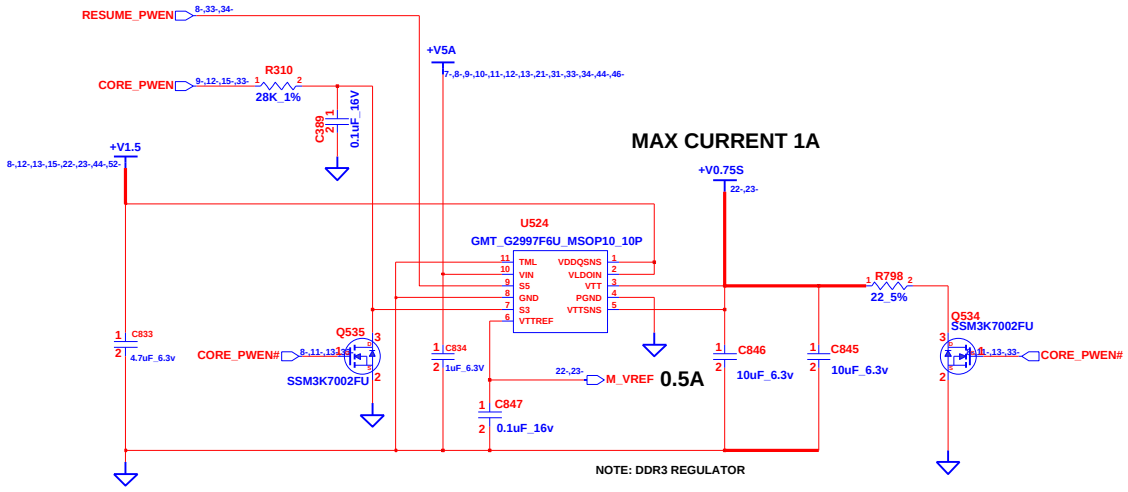

INVENTEC			
TITLE: LUKE 20 +V1.5 & +V0.75			
SIZE A3	CODE CS	DOC. NUMBER 1310A2345303	REV A01
CHANGE by Chan, Shane	2-Feb-2010	SHEET 8 OF 56	

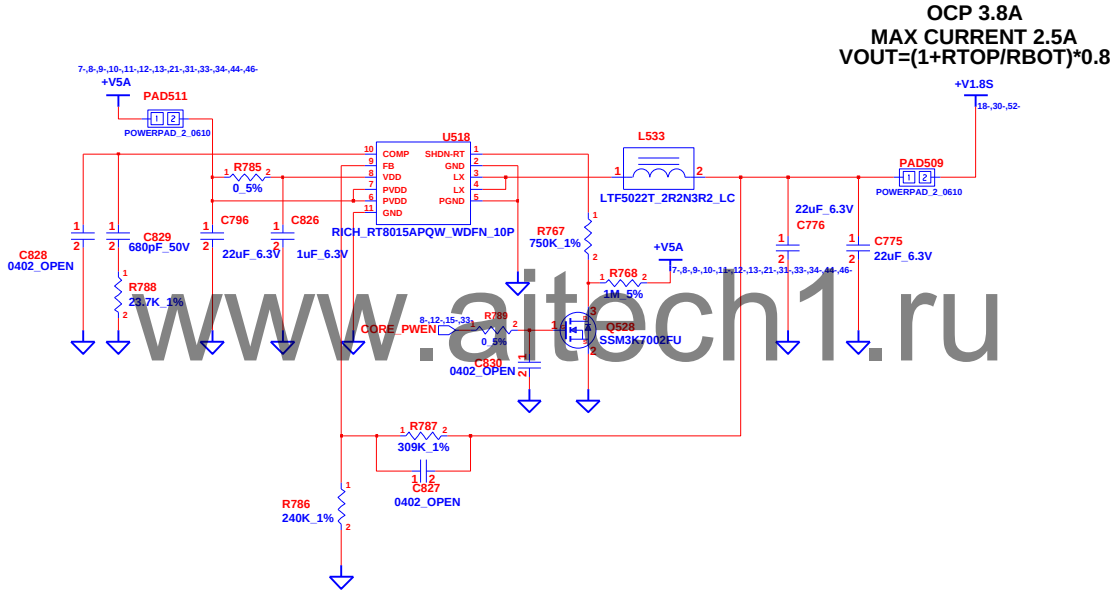

www.aitech1.ru

CHANGE by	Chan, Shane	2-Feb-2010	

INVENTEC

TITLE: *LUKE 20*
+V1.8S & +V1.05S

SIZE	CODE	DOC. NUMBER	REV
A3	CS	1310A2345303	A01

SHEET 9 OF 56

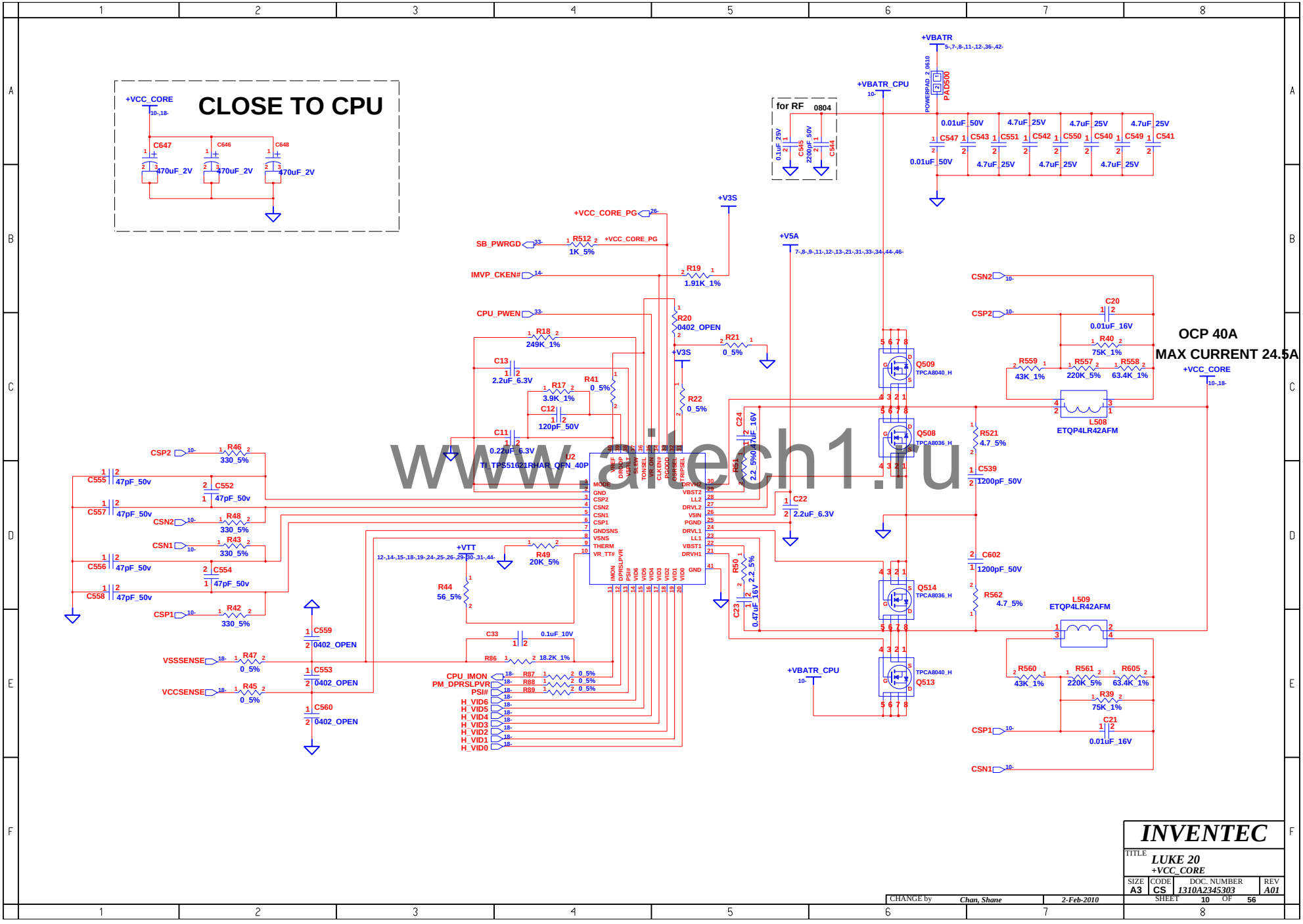

www.altech1.ru

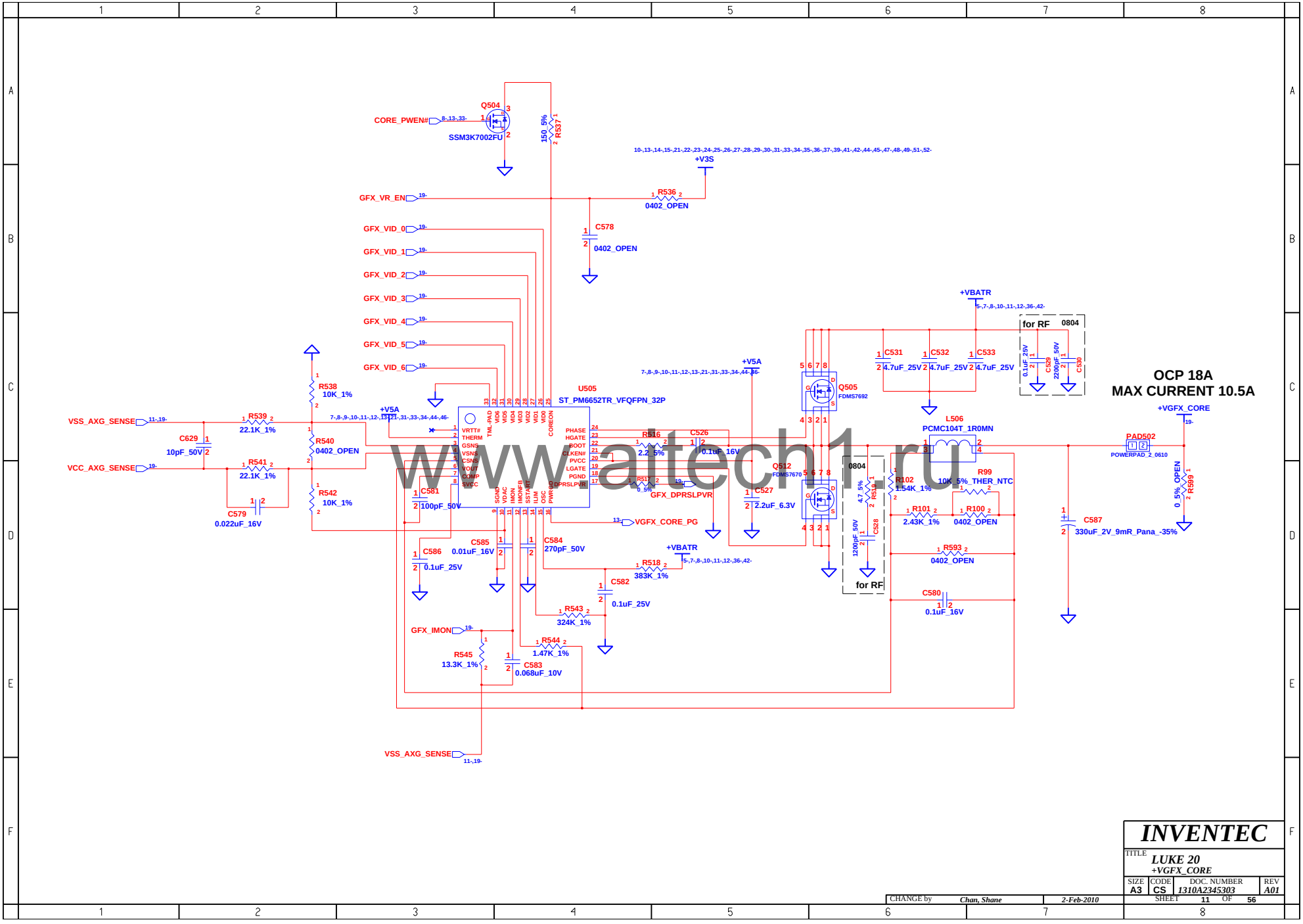

CHANGE by	Chan, Shane	2-Feb-2010	

INVENTEC

TITLE: *LUKE 20*
+VGFX_CORE

SIZE	CODE	DOC. NUMBER	REV
A3	CS	1310A2345303	A01

SHEET 11 OF 56

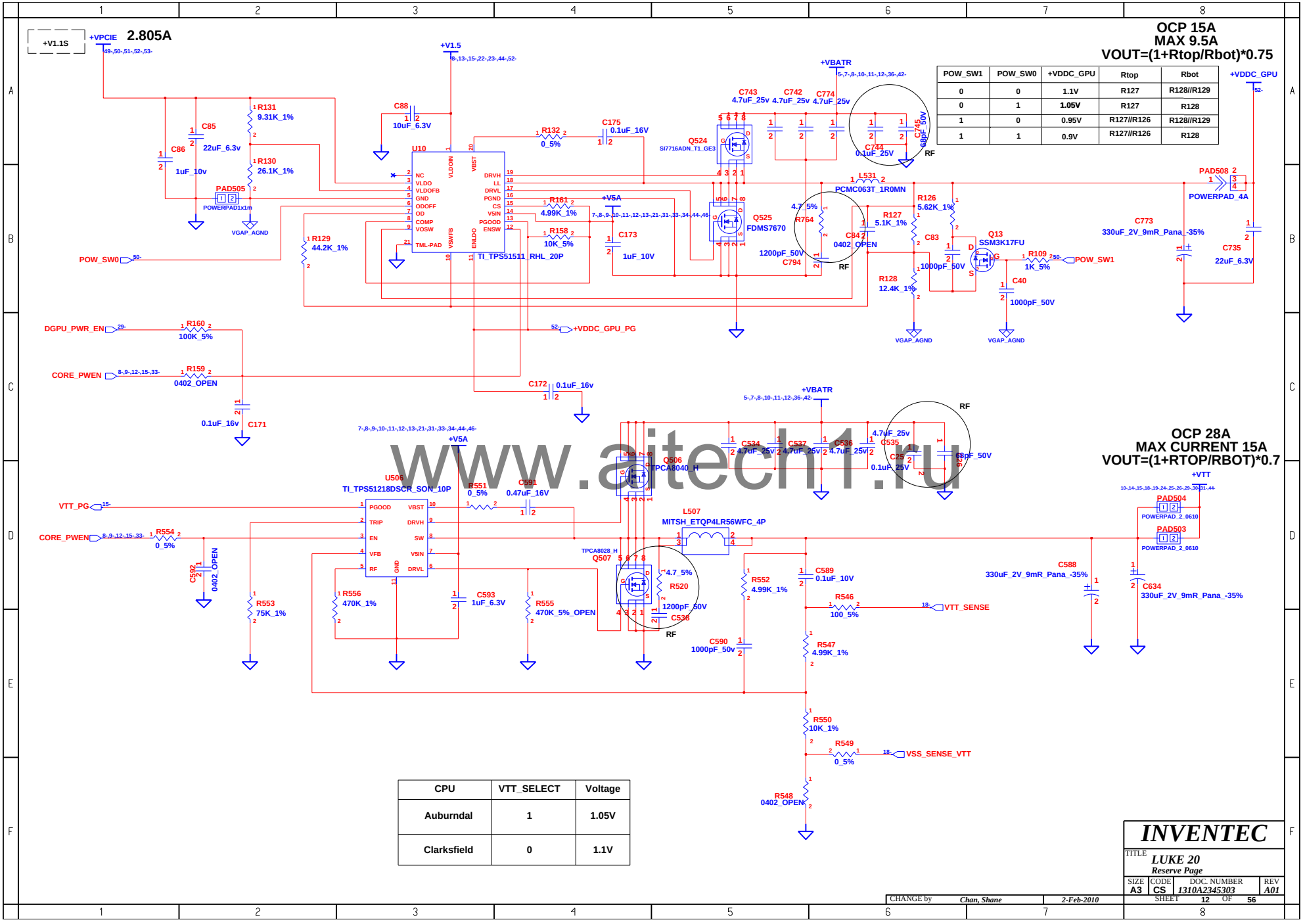

POW_SW1	POW_SW0	+VDDC_GPU	Rtop	Rbot
0	0	1.1V	R127	R128//R129
0	1	1.05V	R127	R128
1	0	0.95V	R127//R126	R128//R129
1	1	0.9V	R127//R126	R128

CPU	VTT_SELECT	Voltage
Auburndal	1	1.05V
Clarksfield	0	1.1V

INVENTEC

TITLE LUKE 20
Reserve Page

SIZE	CODE	DOC. NUMBER	REV
A3	CS	1310A2345303	A01

SHEET 12 OF 56

CHANGE by Chan, Shane 2-Feb-2010

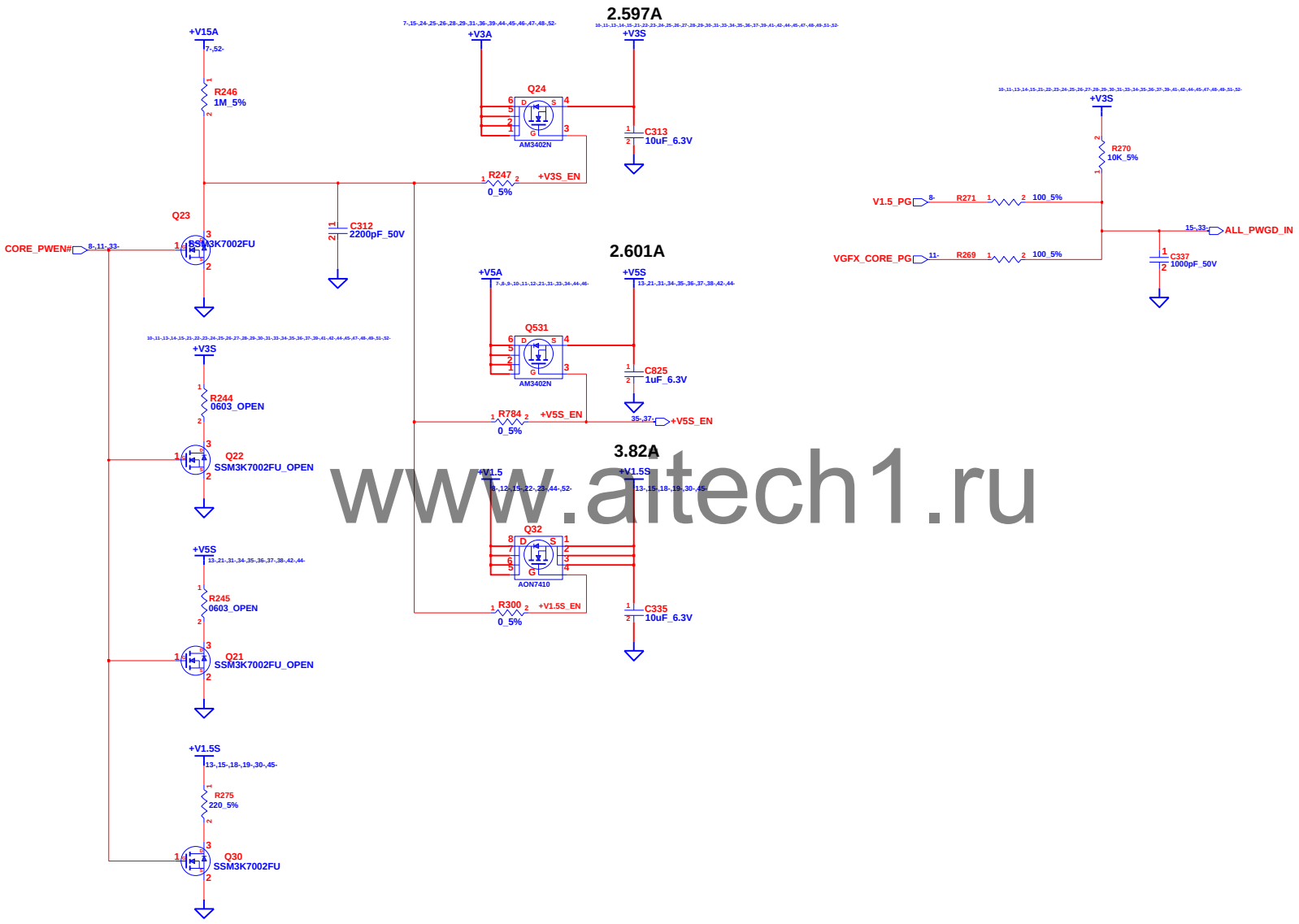

www.altech1.ru

CHANGE by	Chan, Shane	2-Feb-2010	

INVENTEC

TITLE: *LUKE 20*
+V5S & +V3S

SIZE	CODE	DOC. NUMBER	REV
A3	CS	1310A2345303	A01

SHEET 13 OF 56

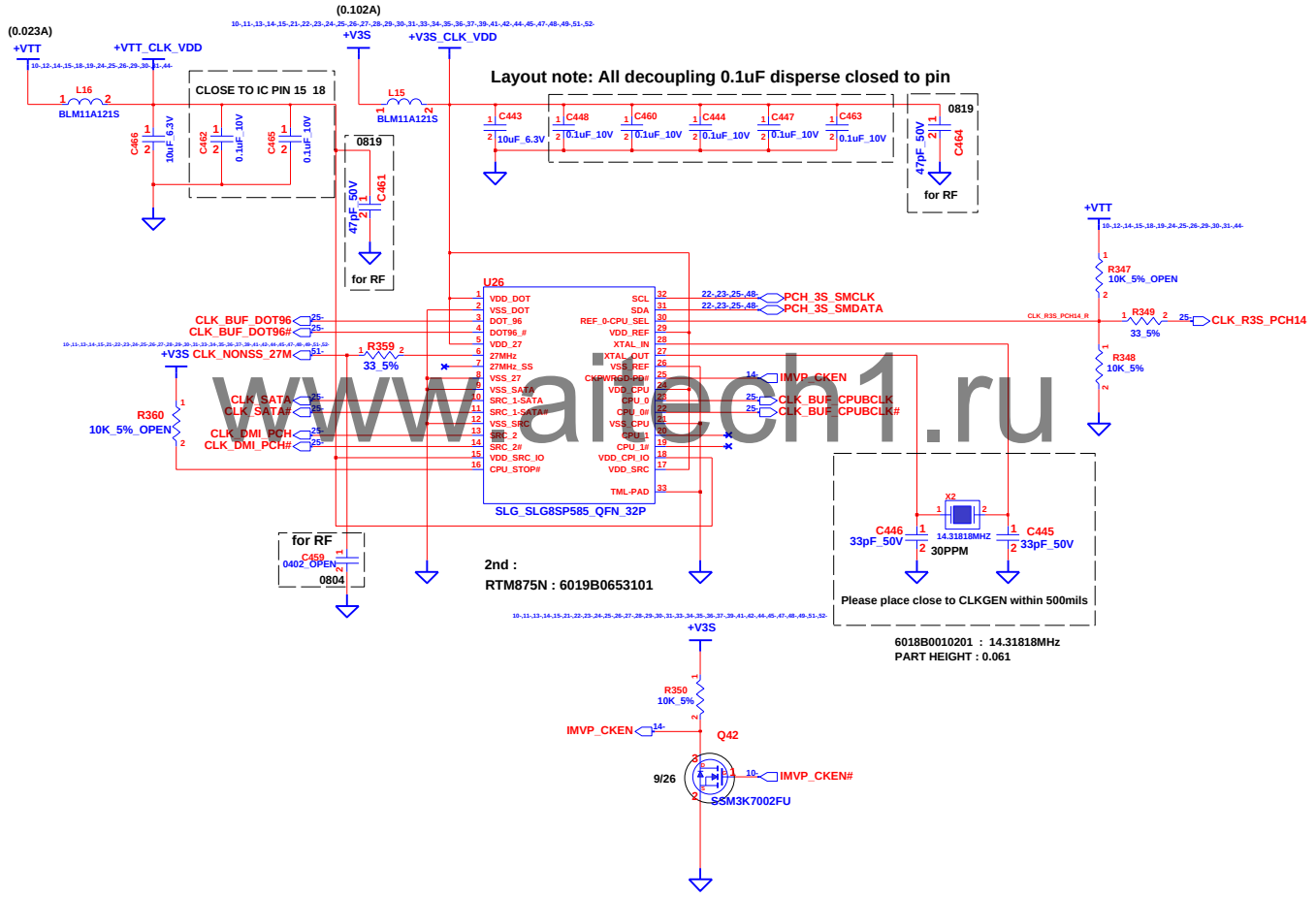

www.alecn1.ru

CHANGE by	Chan, Shane	2-Feb-2010	

INVENTEC

TITLE: *LUKE 20*
CLK GEN

SIZE	CODE	DOC. NUMBER	REV
A3	CS	1310A2345303	A01

SHEET 14 OF 56

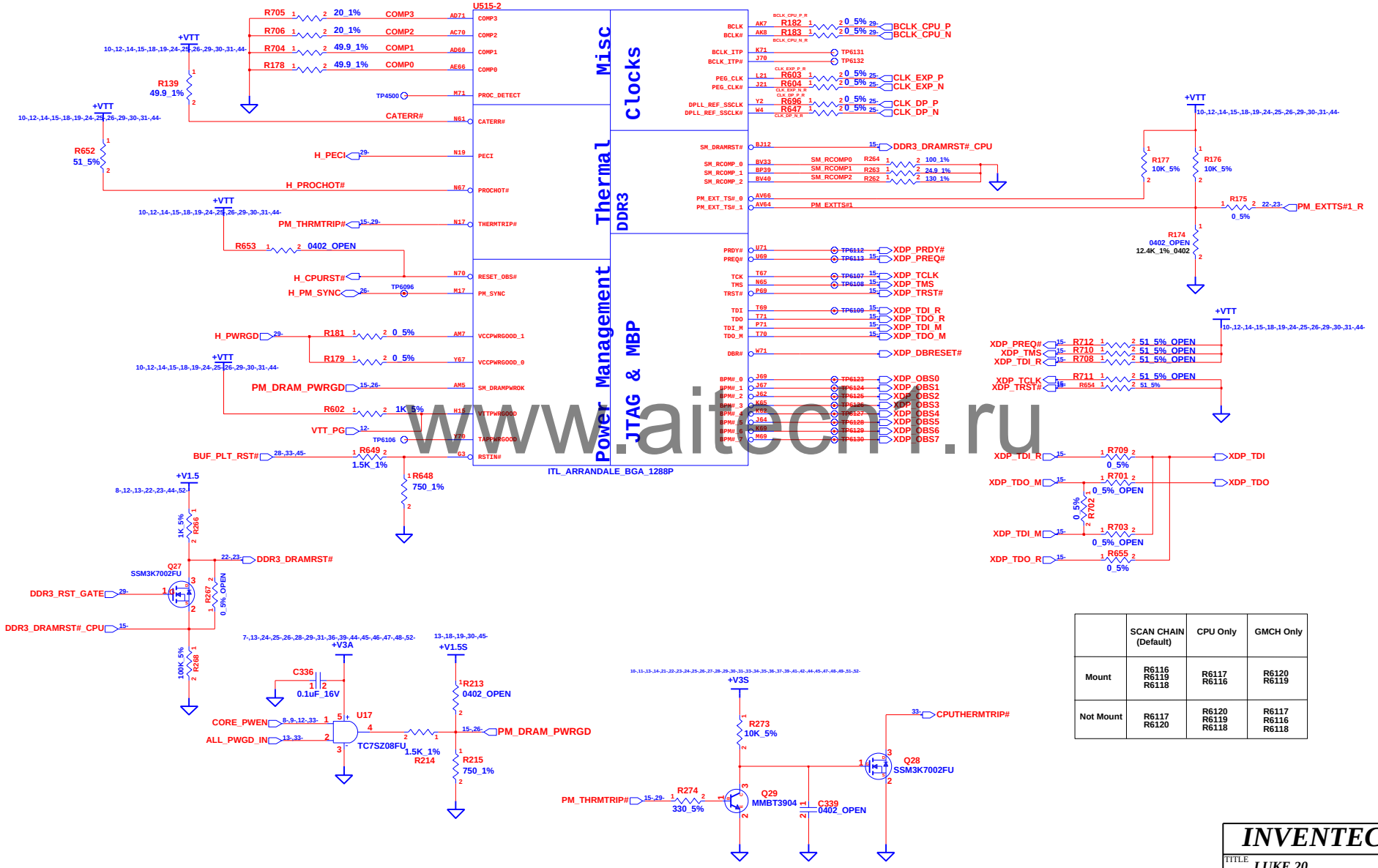

	SCAN CHAIN (Default)	CPU Only	GMCH Only
Mount	R6116 R6119 R6118	R6117 R6116	R6120 R6119
Not Mount	R6117 R6120	R6120 R6119 R6118	R6117 R6116 R6118

www.aitechn.ru

INVENTEC

TITLE LUKE 20
CPU-1

SIZE	CODE	DOC. NUMBER	REV
A3	CS	1310A2345303	A01

CHANGE by Chan, Shane 2-Feb-2010

SHEET 15 OF 56

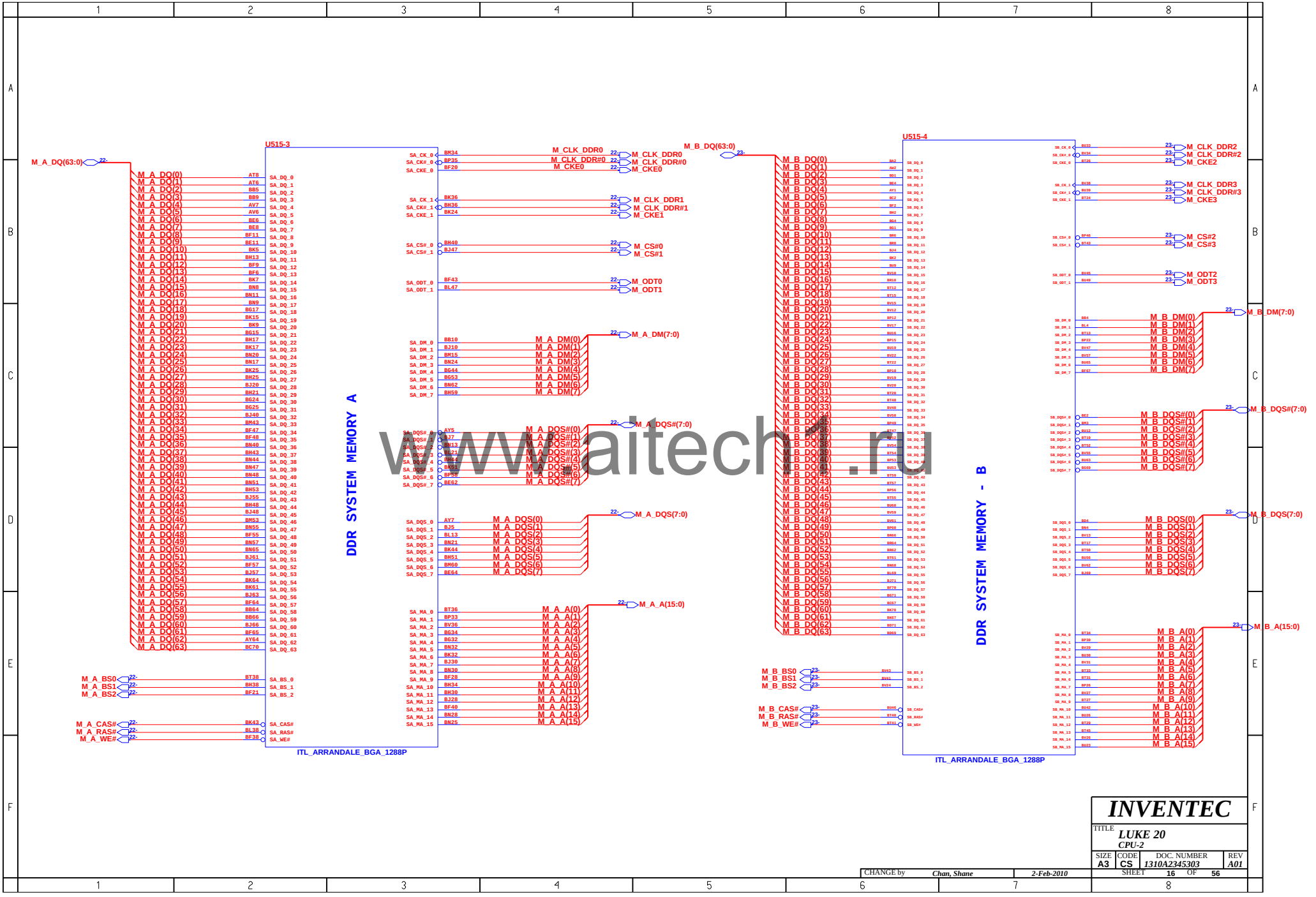

www.aitech.ru

INVENTEC			
TITLE: LUKE 20 CPU-2			
SIZE: A3	CODE: CS	DOC. NUMBER: 1310A2345303	REV: A01
CHANGE by: Chan, Shane	2-Feb-2010	SHEET 16 OF 56	

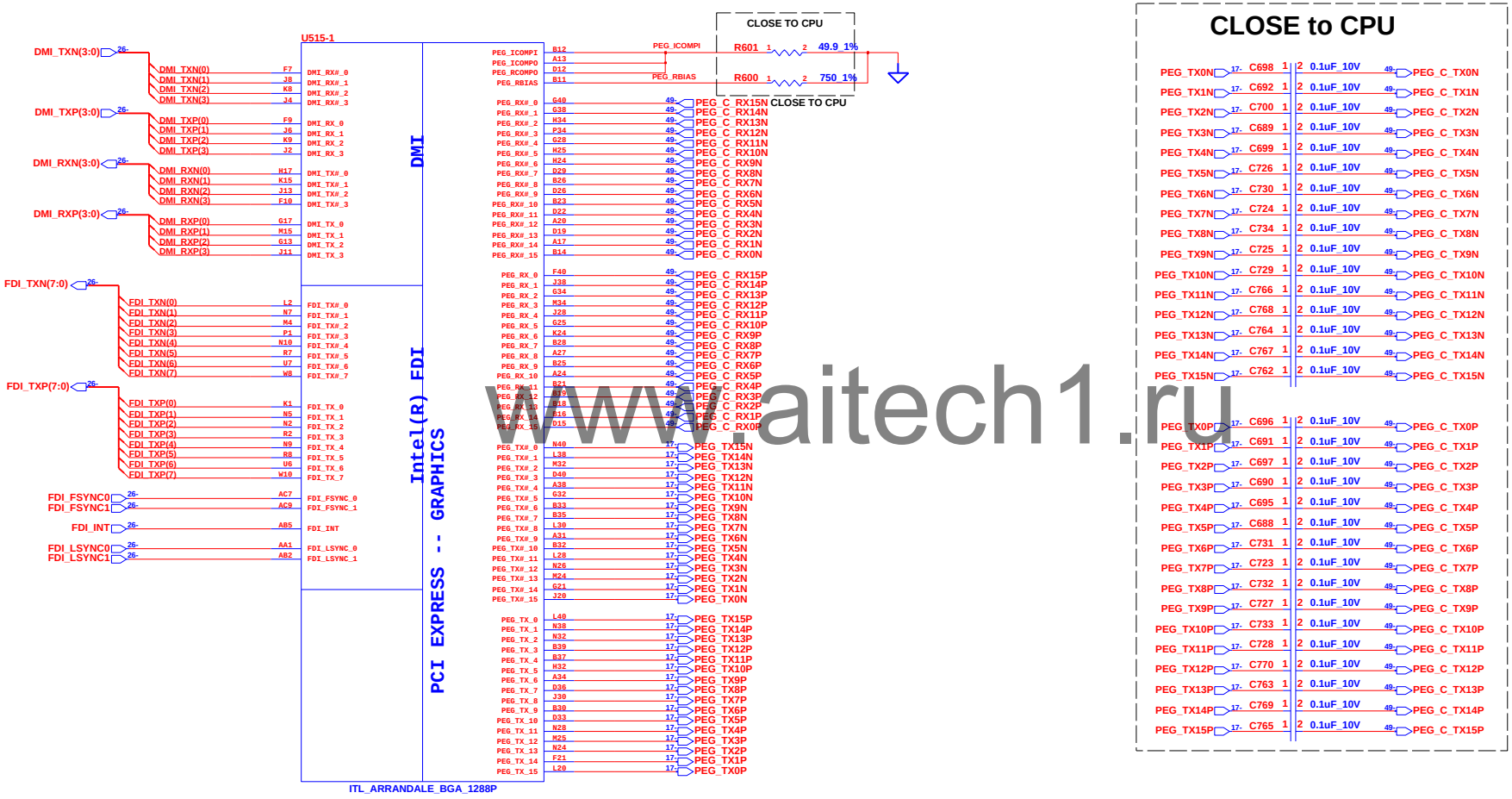

CLOSE to CPU

PEG_TX0N	C698	0.1uF_10V	PEG_C_TX0N	PEG_TX0P	C696	0.1uF_10V	PEG_C_TX0P
PEG_TX1N	C692	0.1uF_10V	PEG_C_TX1N	PEG_TX1P	C691	0.1uF_10V	PEG_C_TX1P
PEG_TX2N	C700	0.1uF_10V	PEG_C_TX2N	PEG_TX2P	C697	0.1uF_10V	PEG_C_TX2P
PEG_TX3N	C689	0.1uF_10V	PEG_C_TX3N	PEG_TX3P	C690	0.1uF_10V	PEG_C_TX3P
PEG_TX4N	C699	0.1uF_10V	PEG_C_TX4N	PEG_TX4P	C695	0.1uF_10V	PEG_C_TX4P
PEG_TX5N	C726	0.1uF_10V	PEG_C_TX5N	PEG_TX5P	C688	0.1uF_10V	PEG_C_TX5P
PEG_TX6N	C730	0.1uF_10V	PEG_C_TX6N	PEG_TX6P	C731	0.1uF_10V	PEG_C_TX6P
PEG_TX7N	C724	0.1uF_10V	PEG_C_TX7N	PEG_TX7P	C723	0.1uF_10V	PEG_C_TX7P
PEG_TX8N	C734	0.1uF_10V	PEG_C_TX8N	PEG_TX8P	C732	0.1uF_10V	PEG_C_TX8P
PEG_TX9N	C725	0.1uF_10V	PEG_C_TX9N	PEG_TX9P	C727	0.1uF_10V	PEG_C_TX9P
PEG_TX10N	C729	0.1uF_10V	PEG_C_TX10N	PEG_TX10P	C733	0.1uF_10V	PEG_C_TX10P
PEG_TX11N	C766	0.1uF_10V	PEG_C_TX11N	PEG_TX11P	C728	0.1uF_10V	PEG_C_TX11P
PEG_TX12N	C768	0.1uF_10V	PEG_C_TX12N	PEG_TX12P	C770	0.1uF_10V	PEG_C_TX12P
PEG_TX13N	C764	0.1uF_10V	PEG_C_TX13N	PEG_TX13P	C763	0.1uF_10V	PEG_C_TX13P
PEG_TX14N	C767	0.1uF_10V	PEG_C_TX14N	PEG_TX14P	C769	0.1uF_10V	PEG_C_TX14P
PEG_TX15N	C762	0.1uF_10V	PEG_C_TX15N	PEG_TX15P	C765	0.1uF_10V	PEG_C_TX15P

www.aitech1.ru

CHANGE by	Chan, Shane	2-Feb-2010	

INVENTEC

TITLE: LUKE 20
CPU-3

SIZE	CODE	DOC. NUMBER	REV
A3	CS	1310A2345303	A01

SHEET 17 OF 56

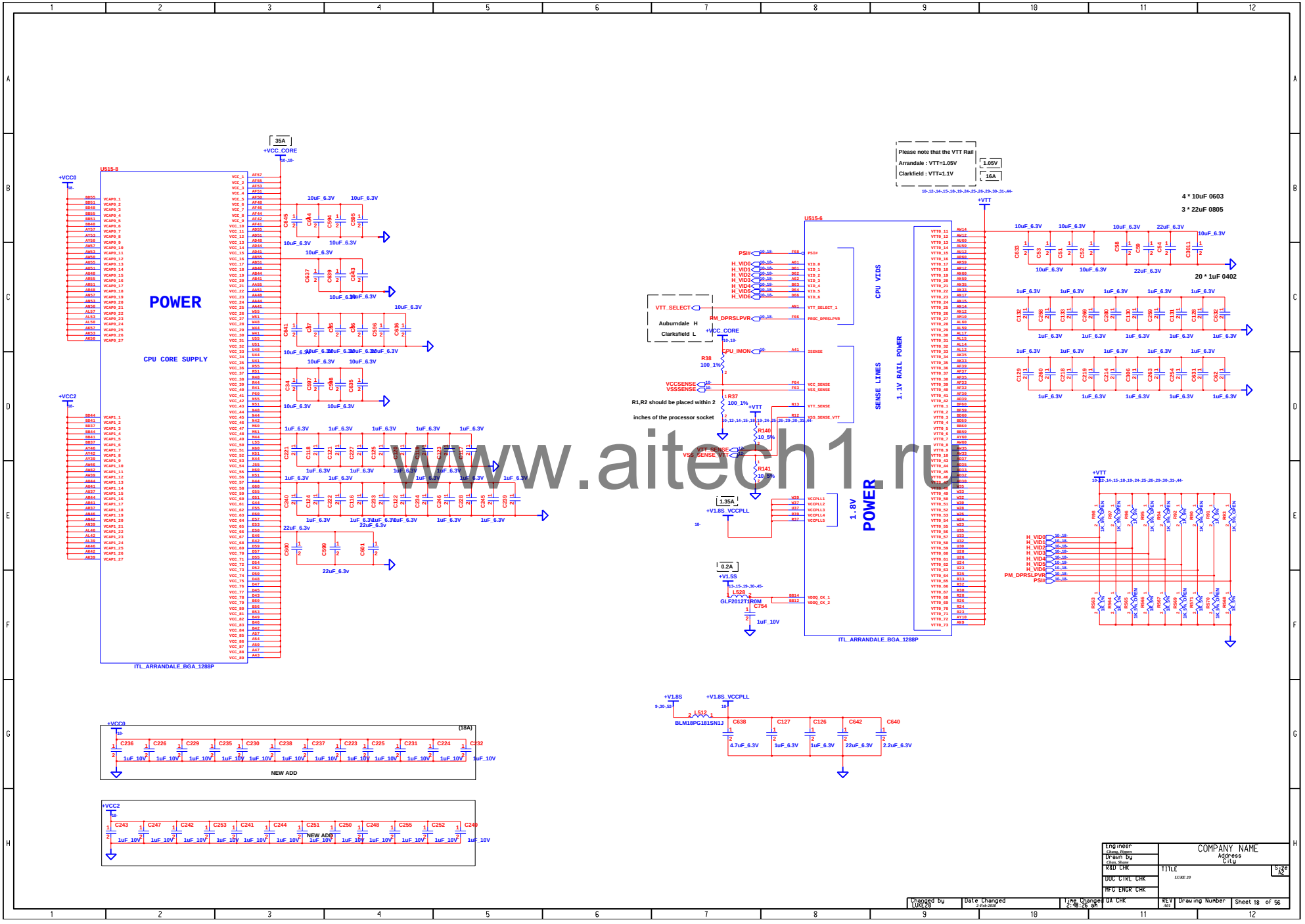

Engineer Chun Pinyo	COMPANY NAME Address City		
Drawn by Chun Shane			
R&D CHK	TITLE LUKE 20	Size A2	
DOC CTRL CHK			
MFG ENGR CHK			
QA CHK	REV A01	Drawing Number	Sheet 18 of 56

Changed by LUKE20 | Date Changed 2-Feb-2010 | Time Changed 2:48:26 am

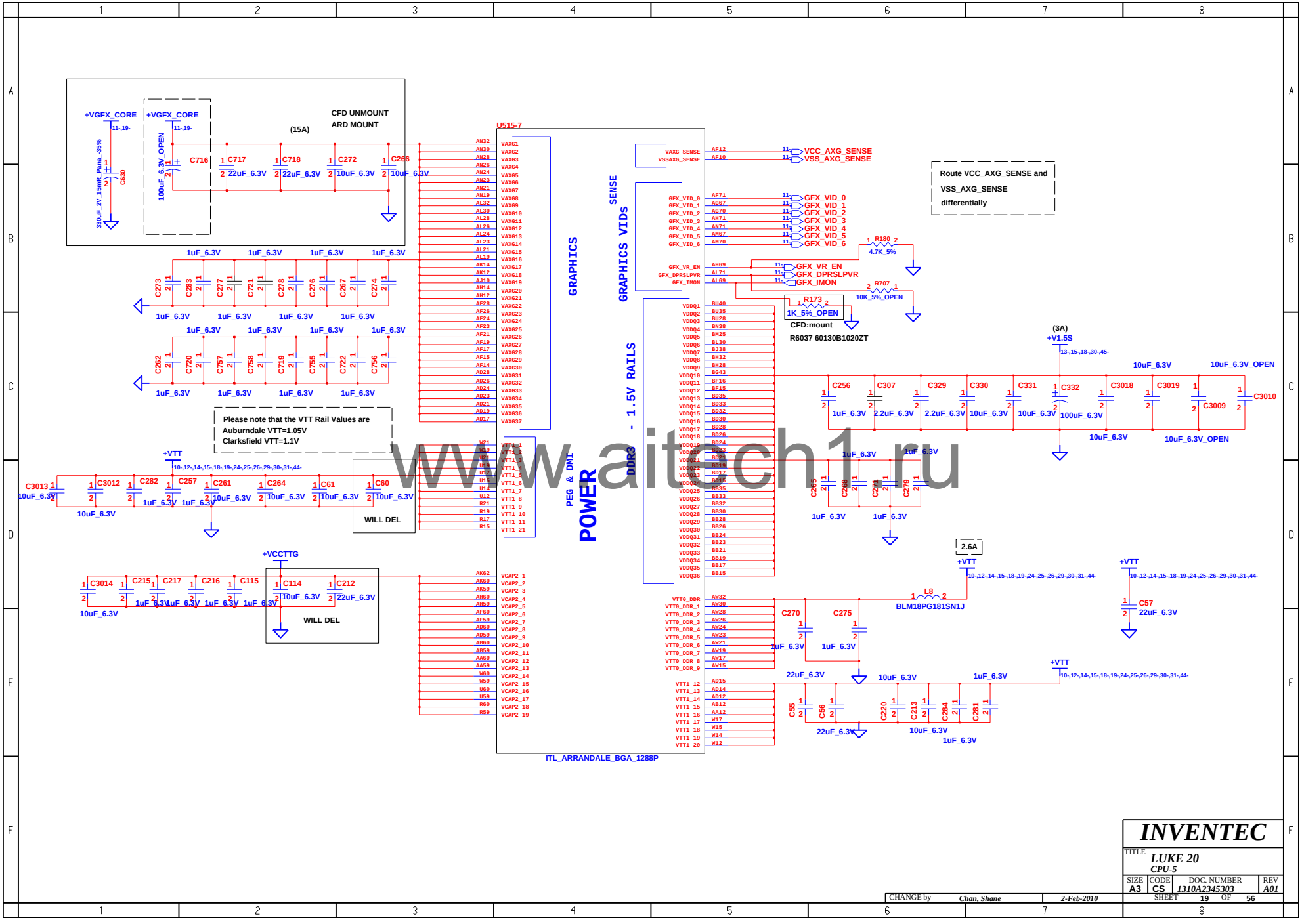

www.aitech1.ru

INVENTEC			
TITLE: LUKE 20 CPU-5			
SIZE A3	CODE CS	DOC. NUMBER 1310A2345303	REV A01
CHANGE by Chan, Shane	2-Feb-2010	SHEET 19 OF 56	

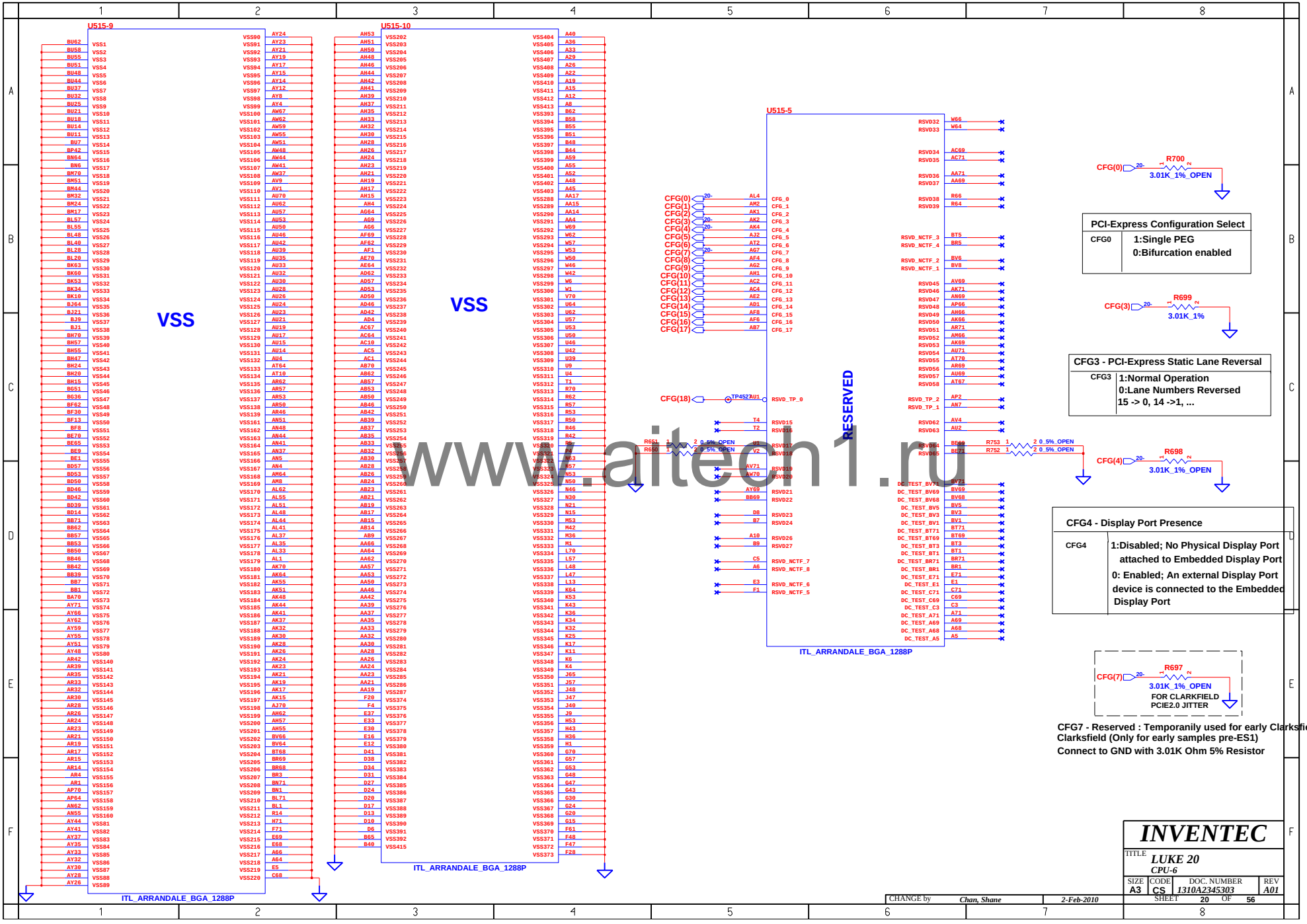

www.aitech1.ru

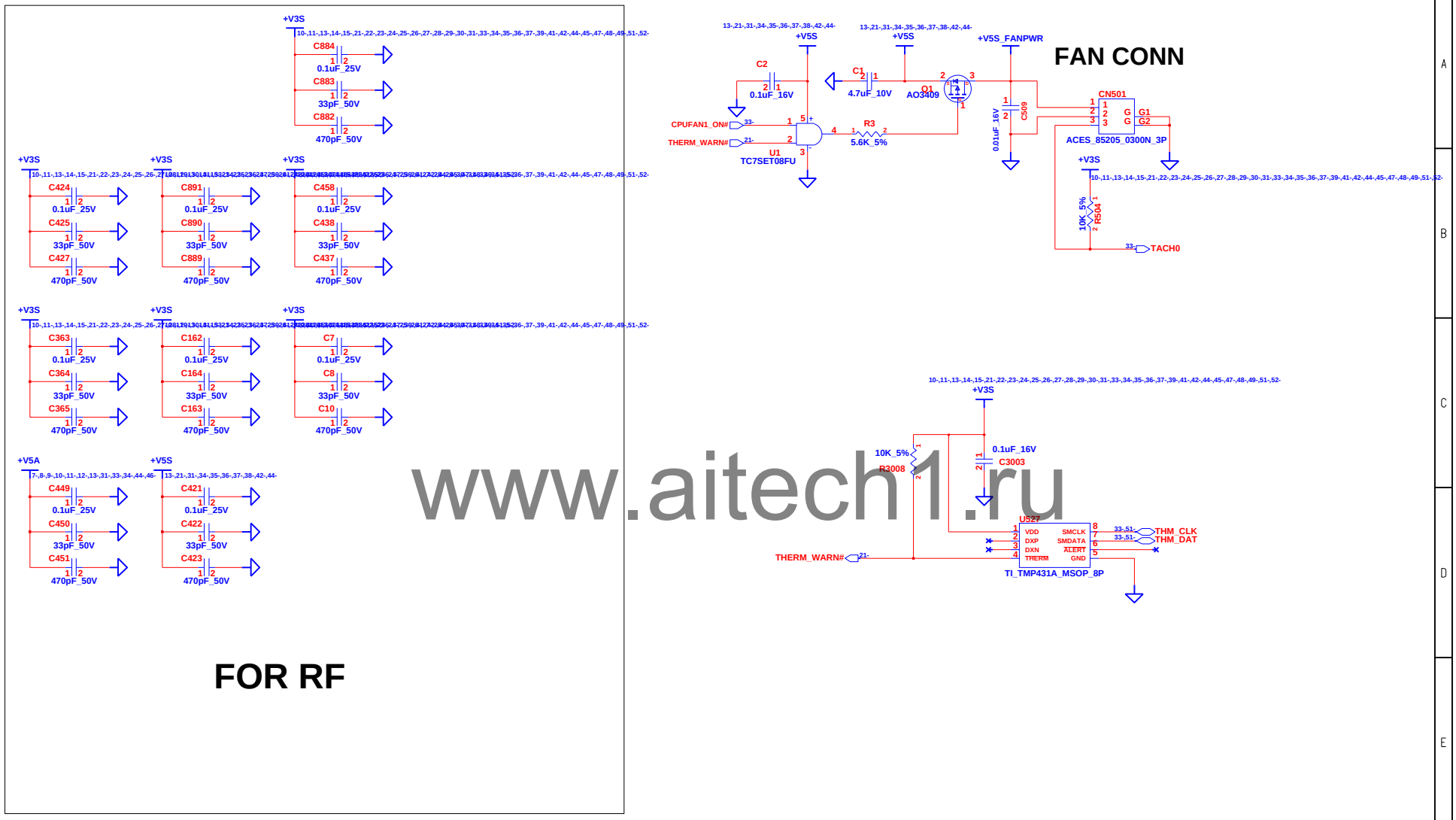

www.aitech1.ru

CHANGE by	Chan, Shane	2-Feb-2010	

INVENTEC

TITLE: *LUKE 20*
Thermal, Fan & XDP

SIZE	CODE	DOC. NUMBER	REV
A3	CS	1310A2345303	A01

SHEET 21 OF 56

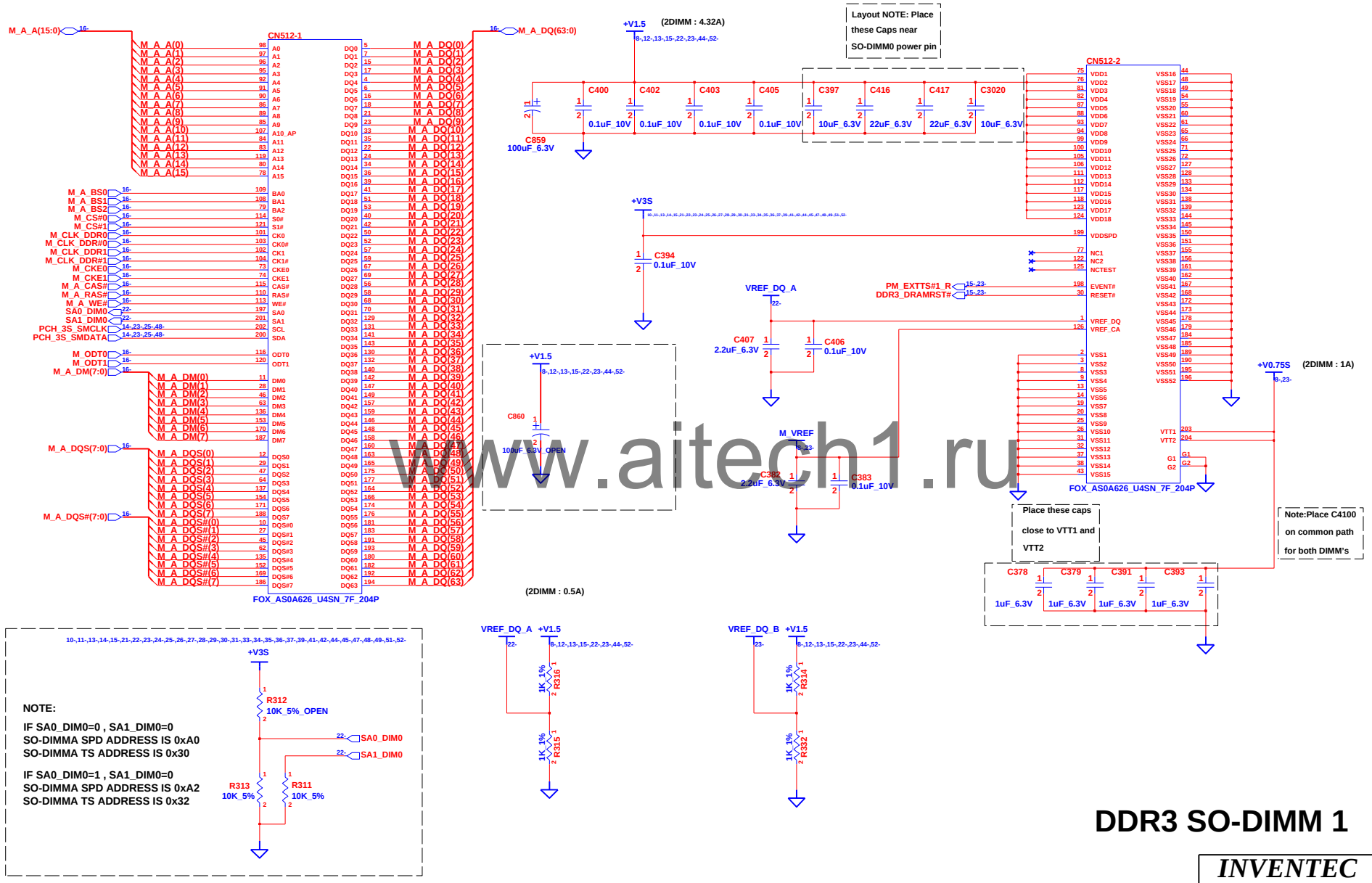

www.aitech1.ru

DDR3 SO-DIMM 1

INVENTEC

TITLE: LUKE 20
DDR3-1

SIZE	CODE	DOC. NUMBER	REV
A3	CS	1310A2345303	A01

CHANGE by: Chan, Shane — 2-Feb-2010

SHEET 22 OF 56

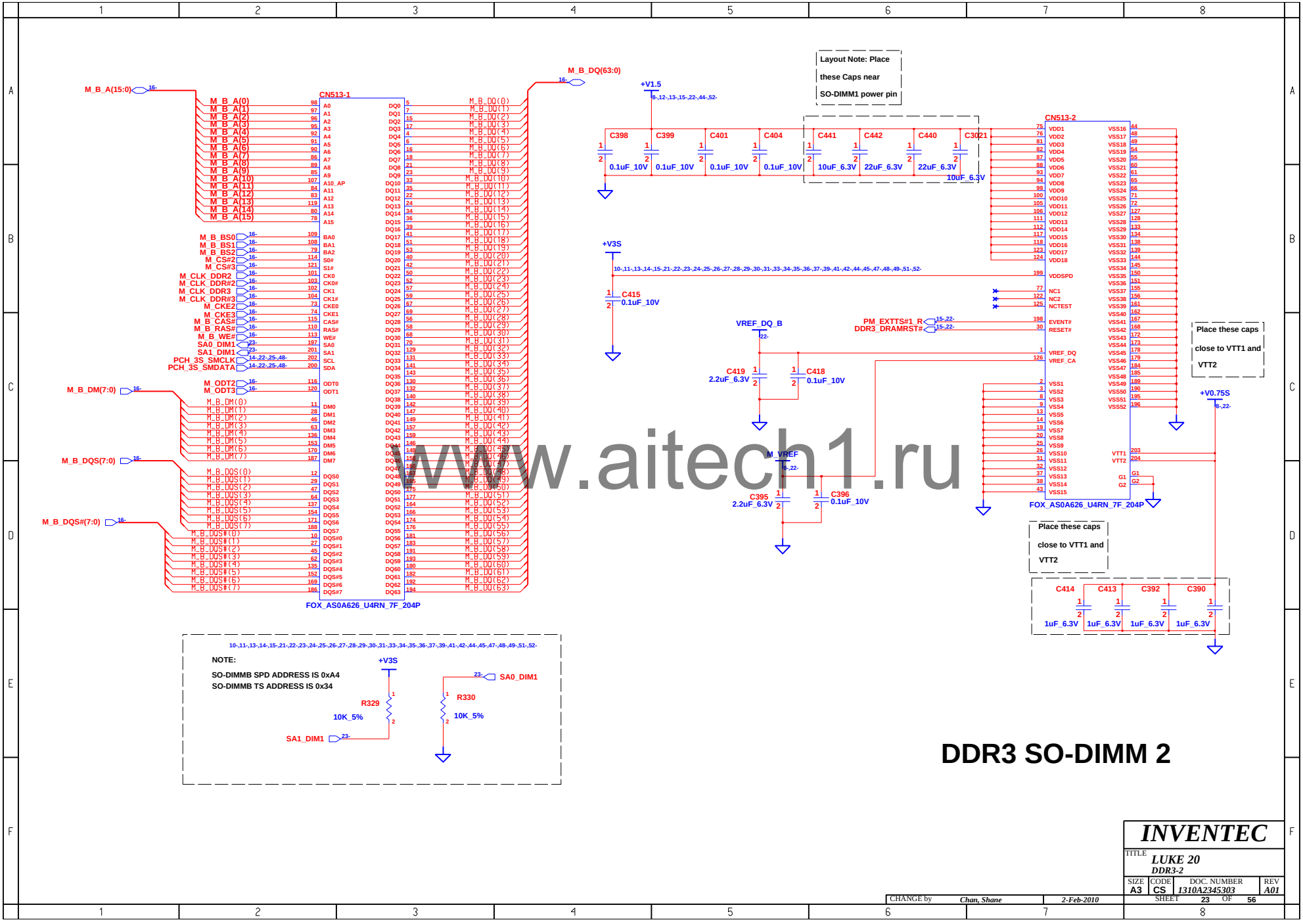

www.aitech1.ru

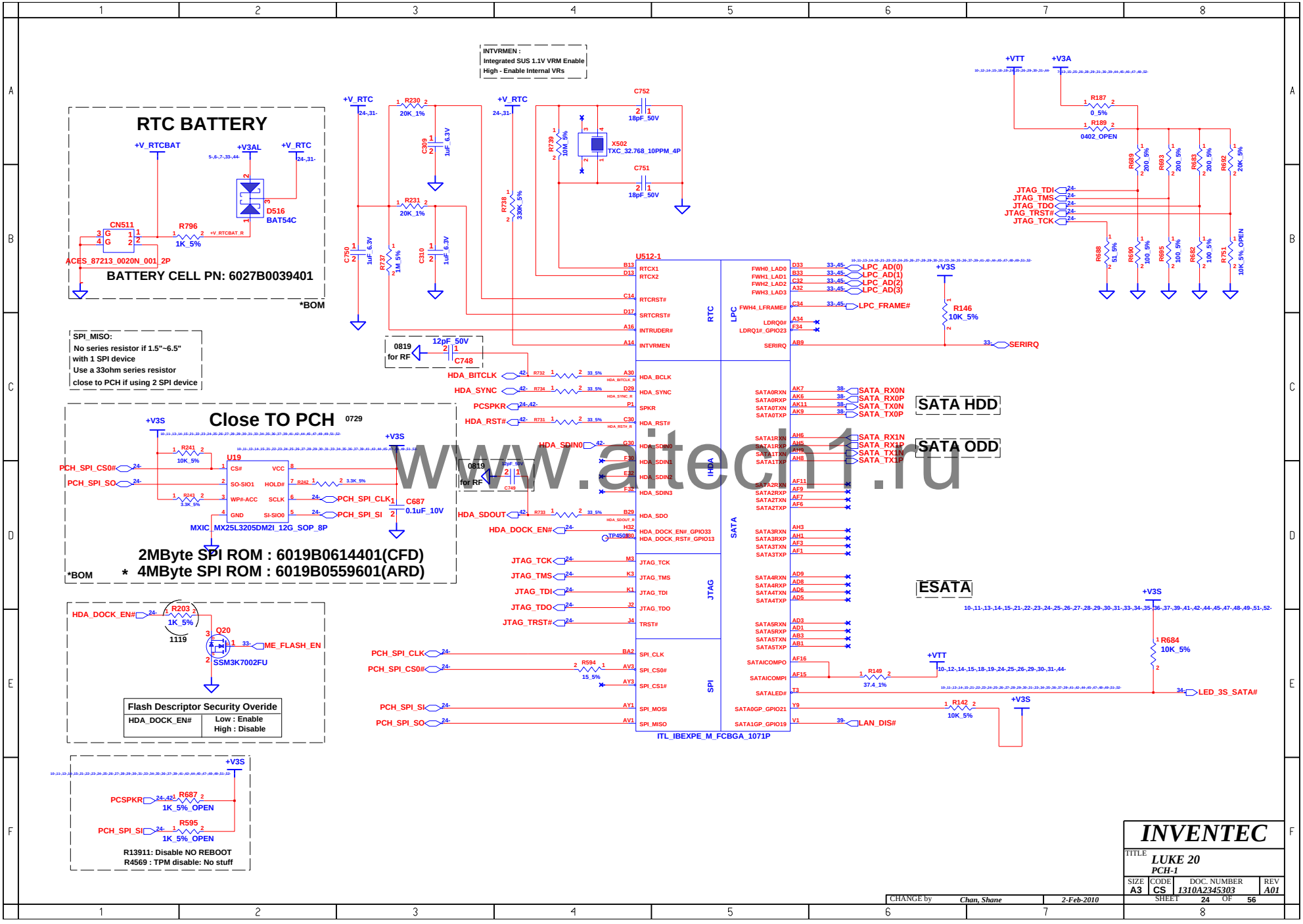

www.aitech1.ru

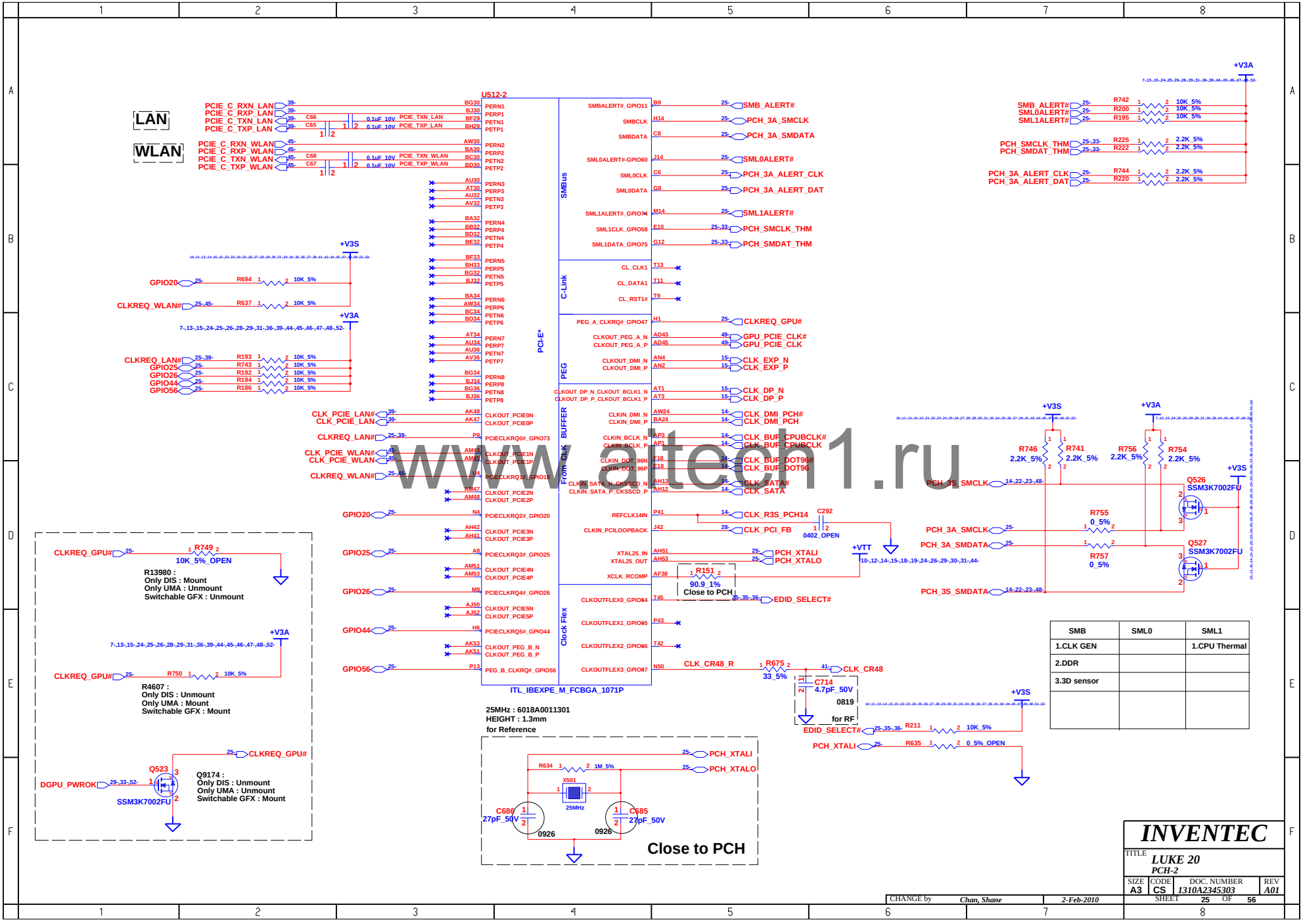

www.altech1.ru

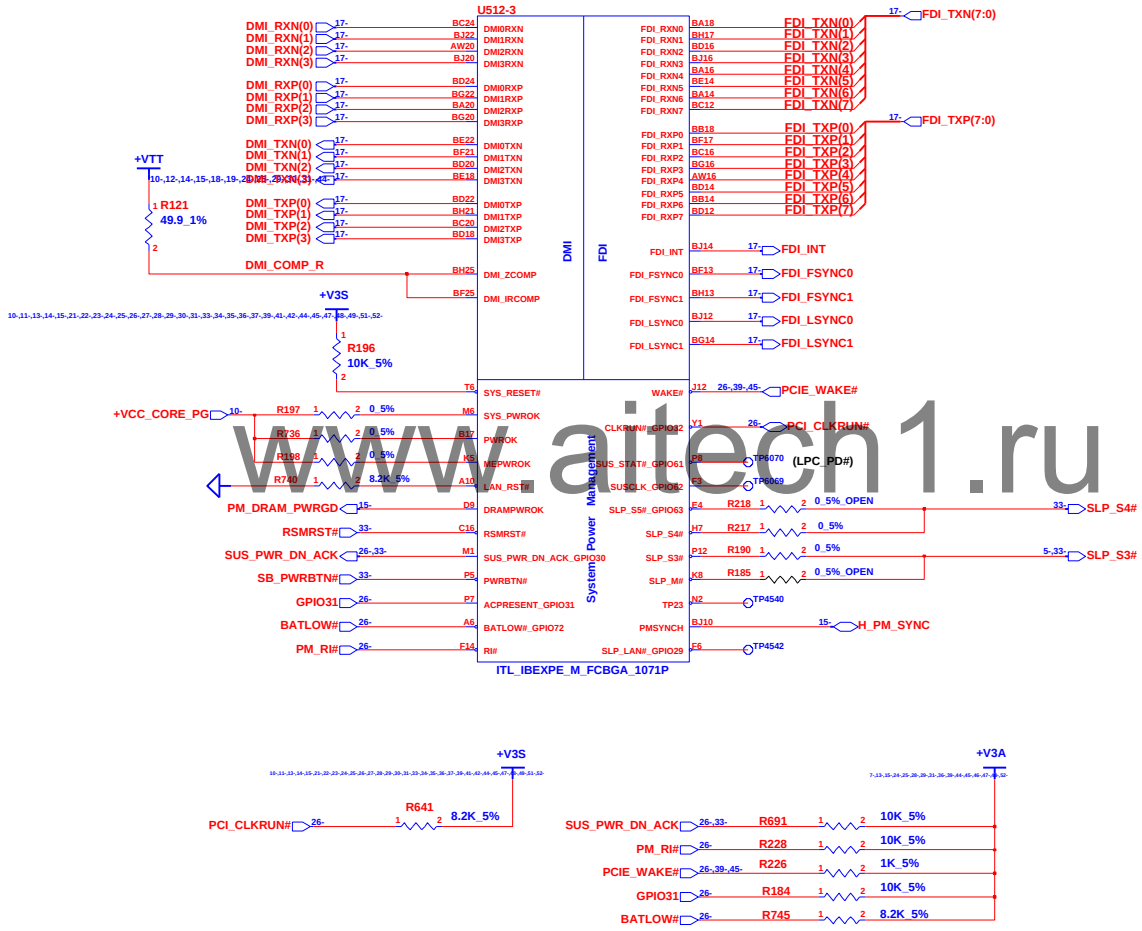

www.aitech1.ru

INVENTEC			
TITLE LUKE 20 PCH-3			
SIZE A3	CODE CS	DOC. NUMBER 1310A2345303	REV A01
CHANGE by Chan, Shane	2-Feb-2010	SHEET 26 OF 56	

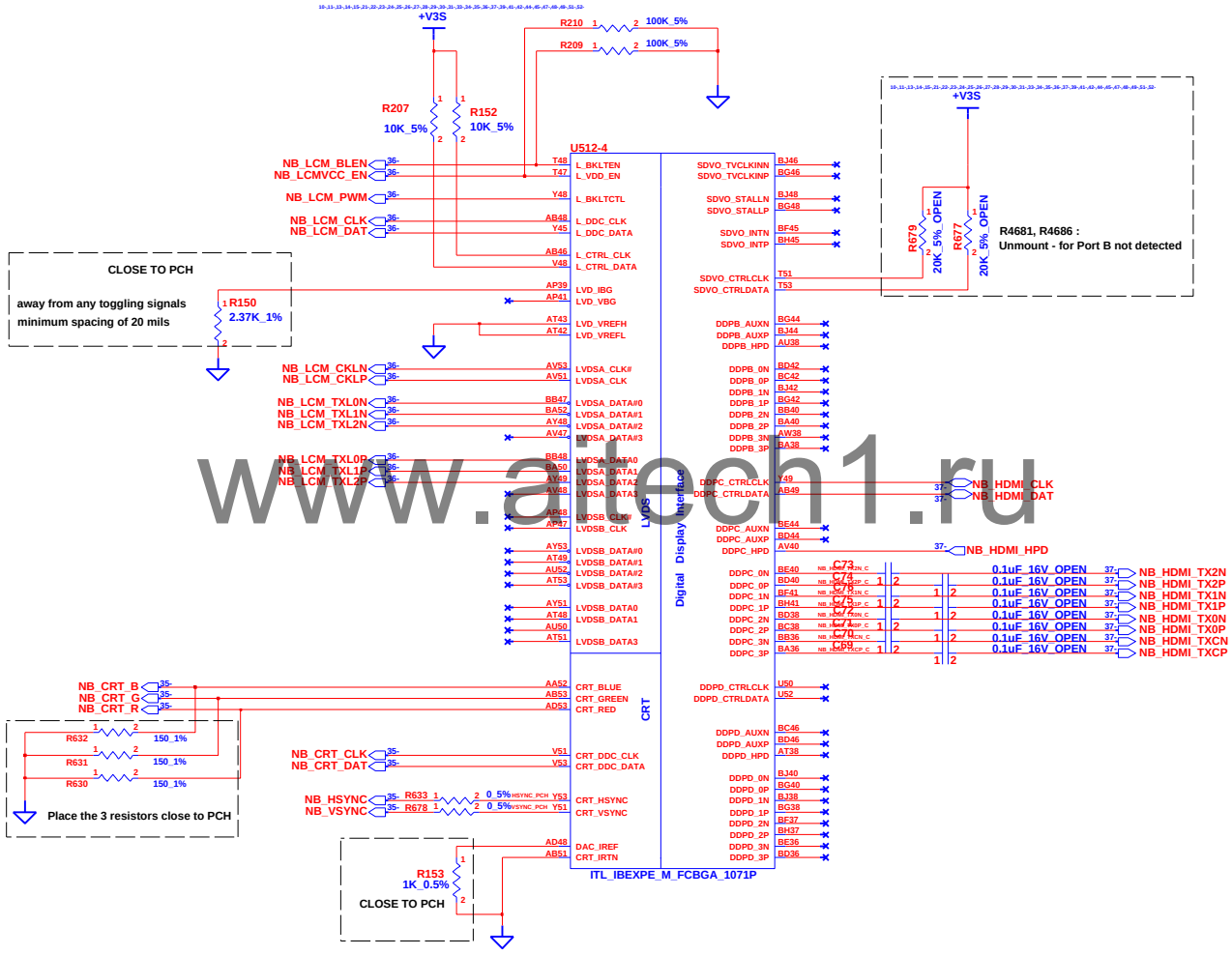

www.aitech1.ru

CHANGE by	Chan, Shane	2-Feb-2010	

INVENTEC

TITLE: LUKE 20
PCH-4

SIZE	CODE	DOC. NUMBER	REV
A3	CS	1310A2345303	A01

SHEET 27 OF 56

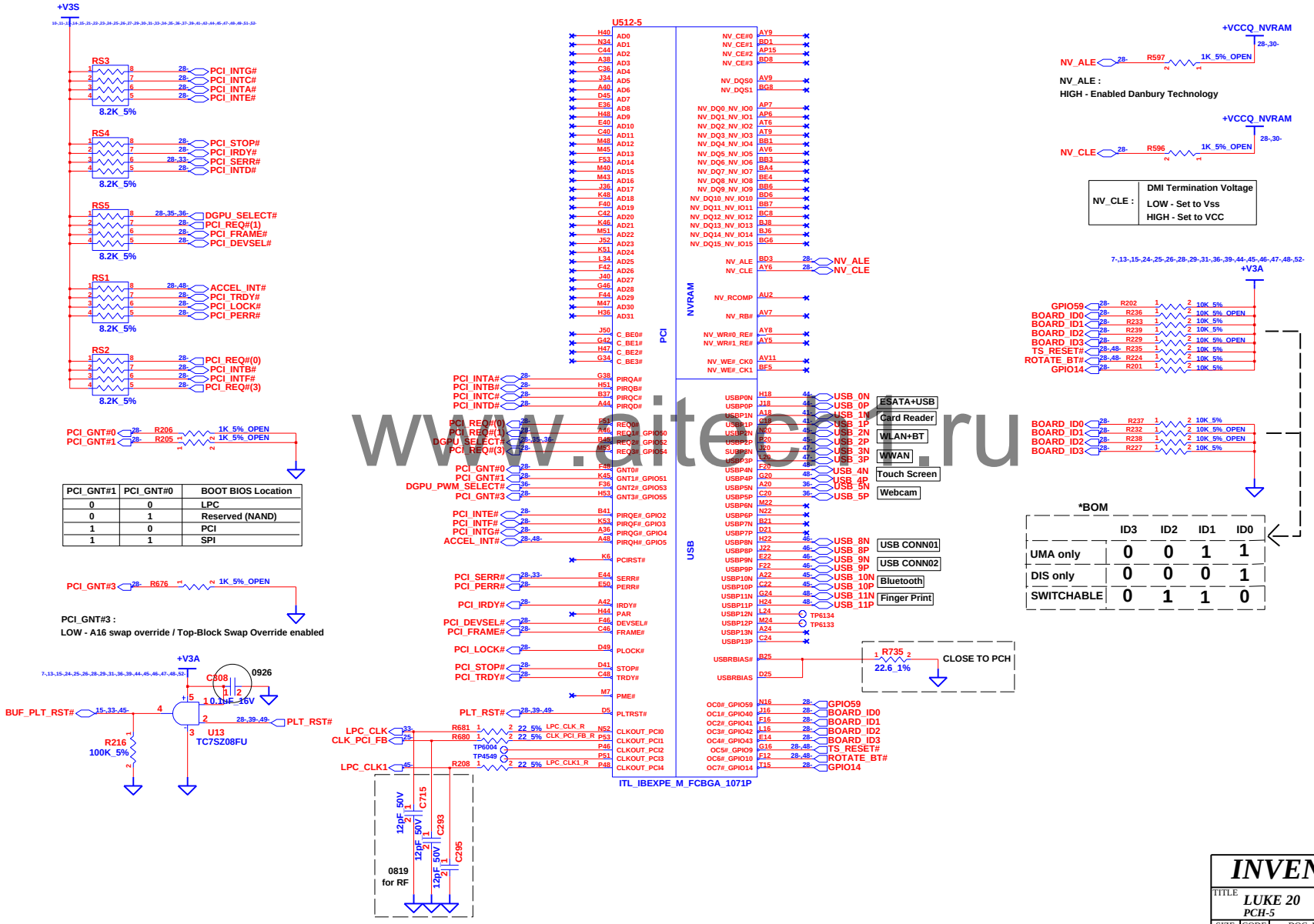

www.aitecf.ru

INVENTEC

TITLE LUKE 20
PCH-5

SIZE	CODE	DOC. NUMBER	REV
A3	CS	1310A2345303	A01

SHEET 28 OF 56

CHANGE by Chan, Shane 2-Feb-2010

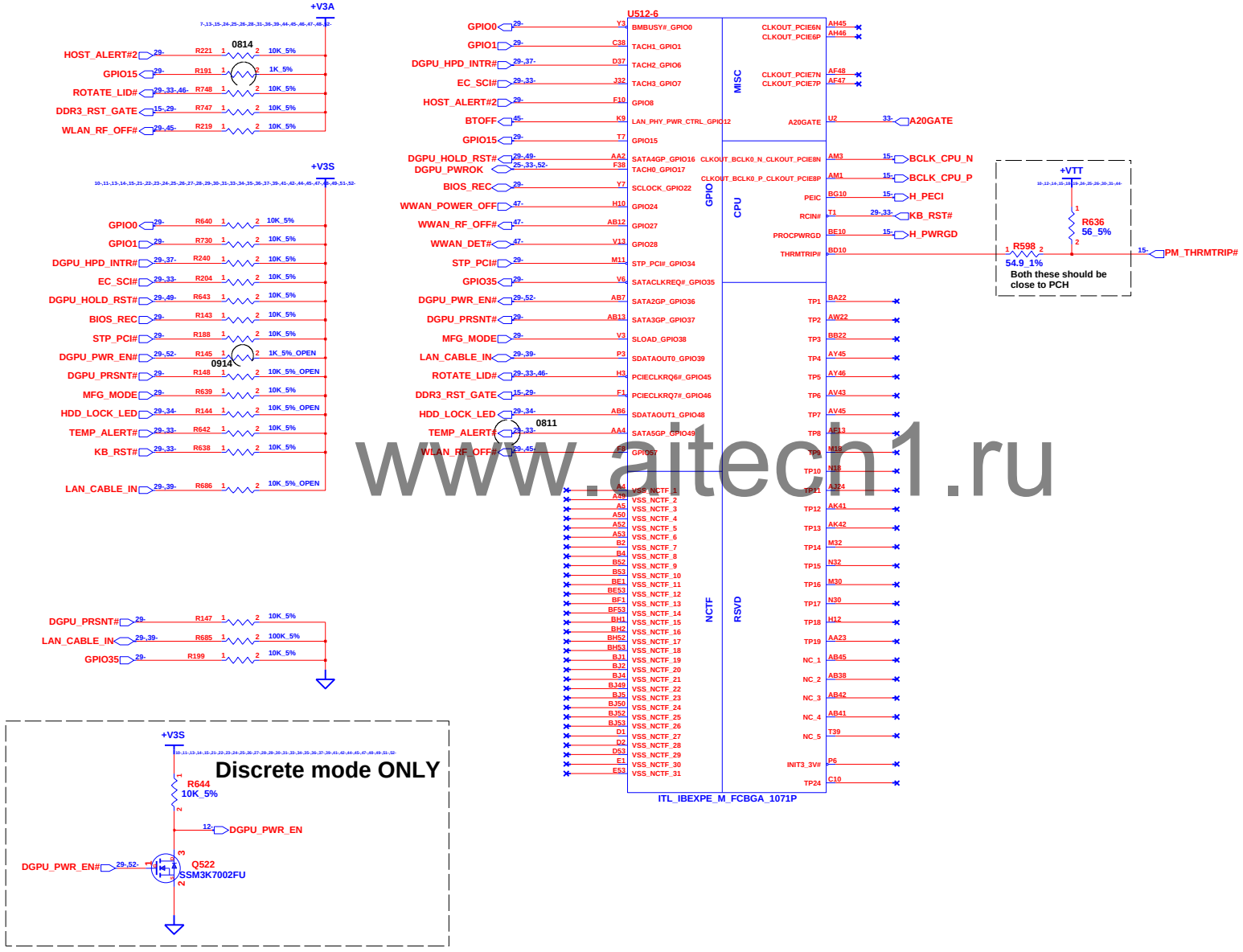

www.aitech1.ru

CHANGE by	Chan, Shane	2-Feb-2010	

INVENTEC

TITLE: LUKE 20
PCH-6

SIZE	CODE	DOC. NUMBER	REV
A3	CS	1310A2345303	A01

SHEET 29 OF 56

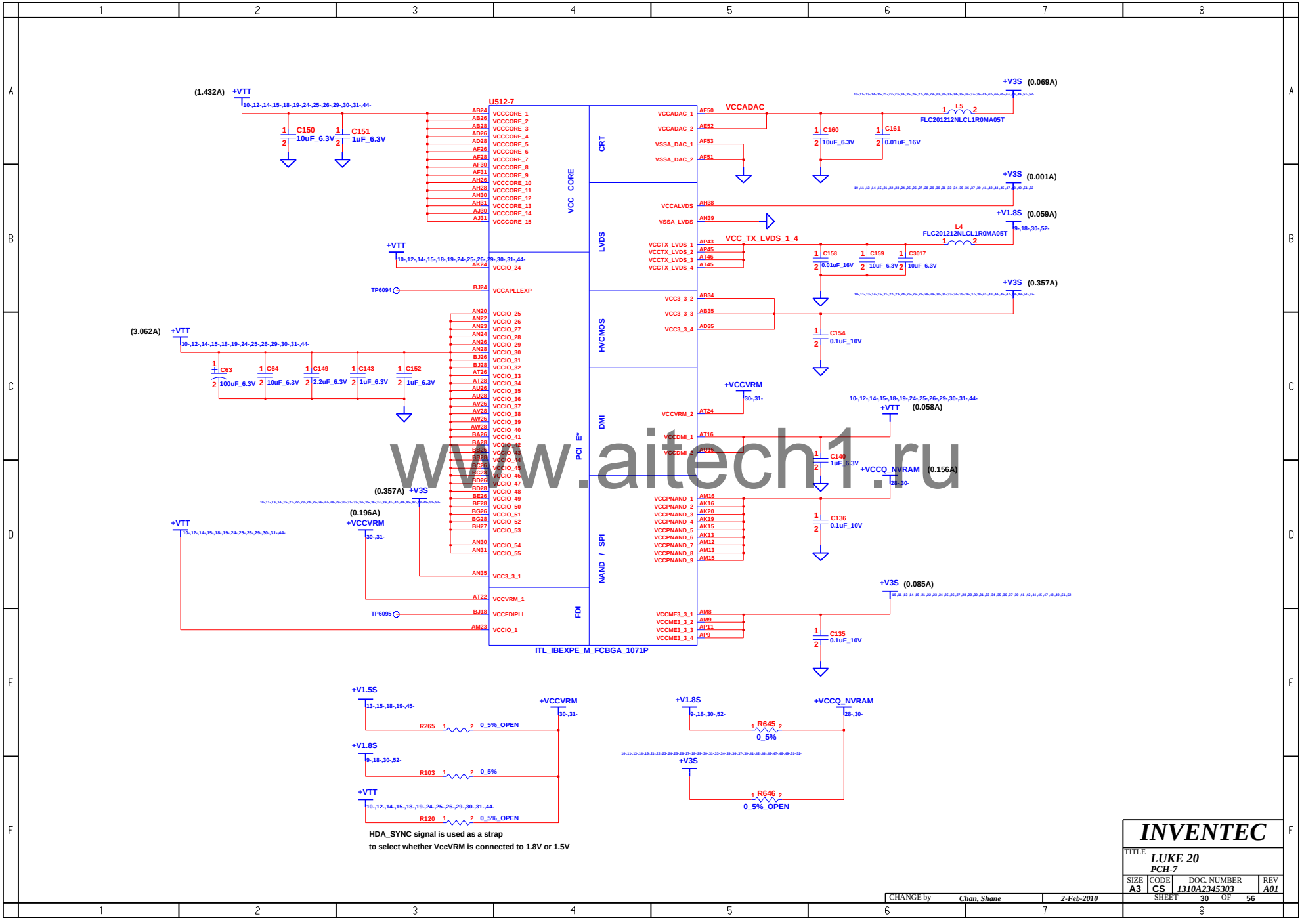

www.aitech1.ru

INVENTEC			
TITLE LUKE 20 PCH-7			
SIZE A3	CODE CS	DOC. NUMBER 1310A2345303	REV A01
CHANGE by Chan, Shane	2-Feb-2010	SHEET 30 OF 56	

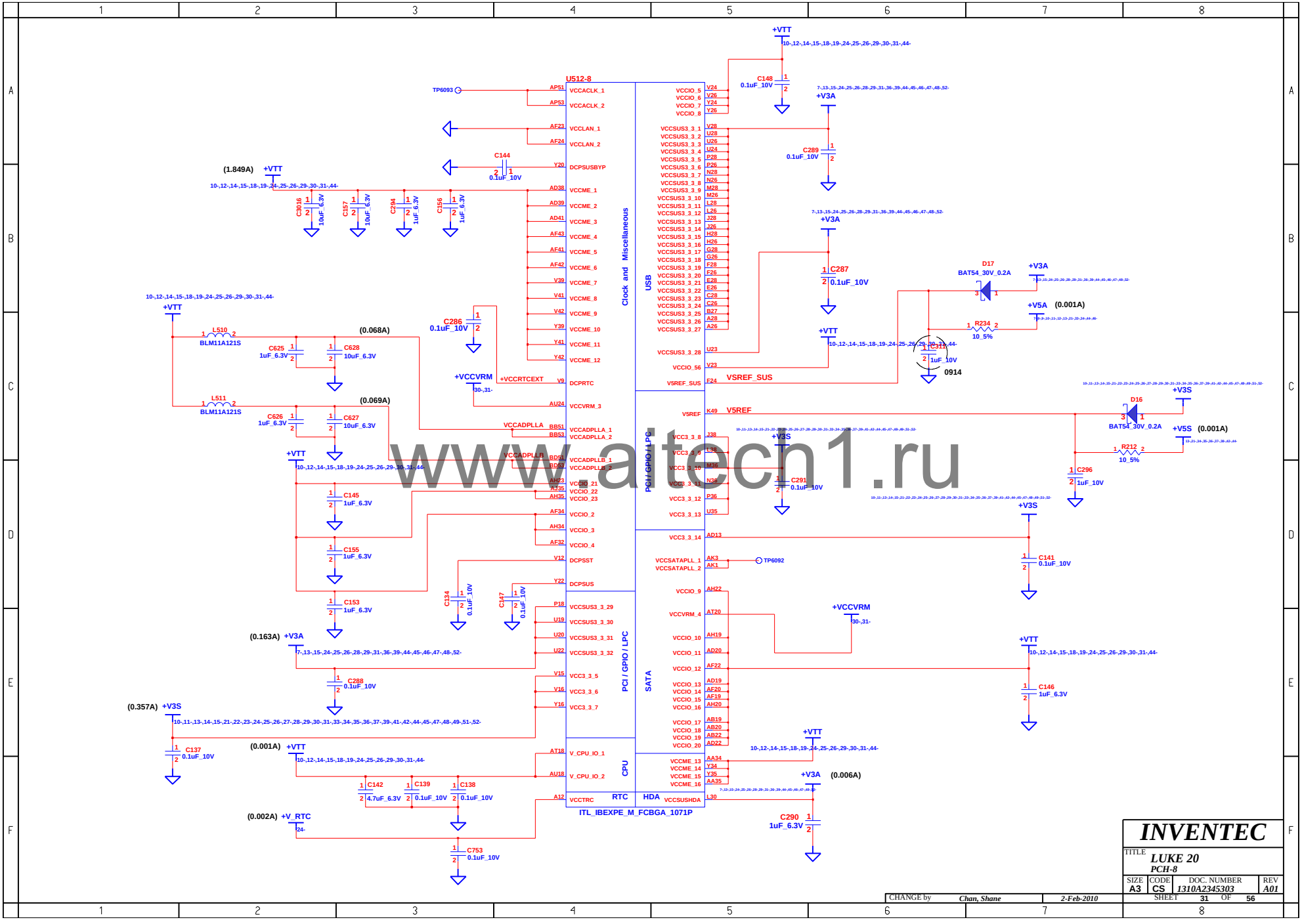

www.atecn1.ru

CHANGE by	Chan, Shane	2-Feb-2010	

INVENTEC

TITLE: LUKE 20
PCH-8

SIZE	CODE	DOC. NUMBER	REV
A3	CS	1310A2345303	A01

SHEET 31 OF 56

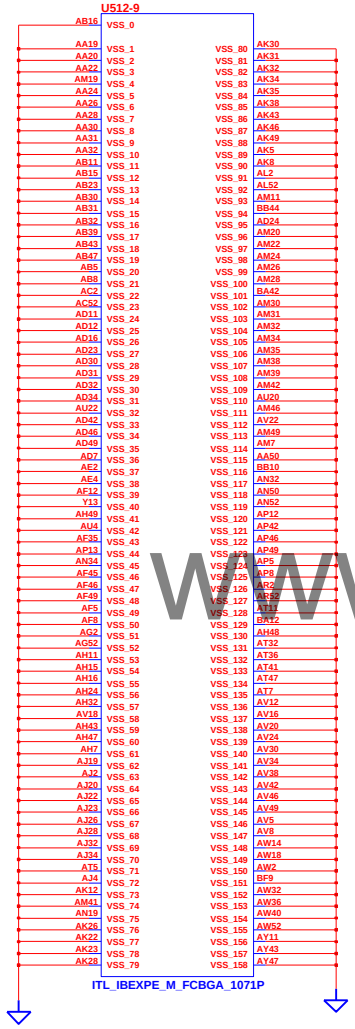

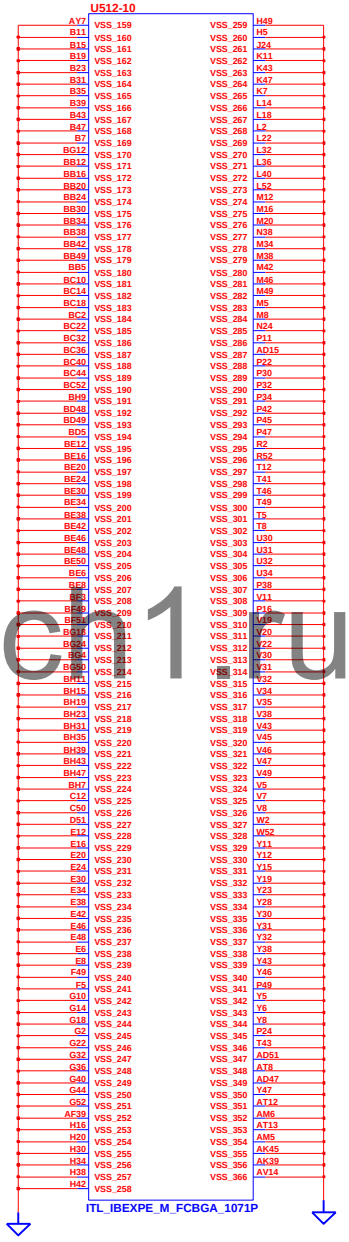

www.aitec1.ru

CHANGE by	Chan, Shane	2-Feb-2010	

INVENTEC

TITLE
LUKE 20
PCH-9

SIZE	CODE	DOC. NUMBER	REV
A3	CS	1310A2345303	A01

SHEET 32 OF 56

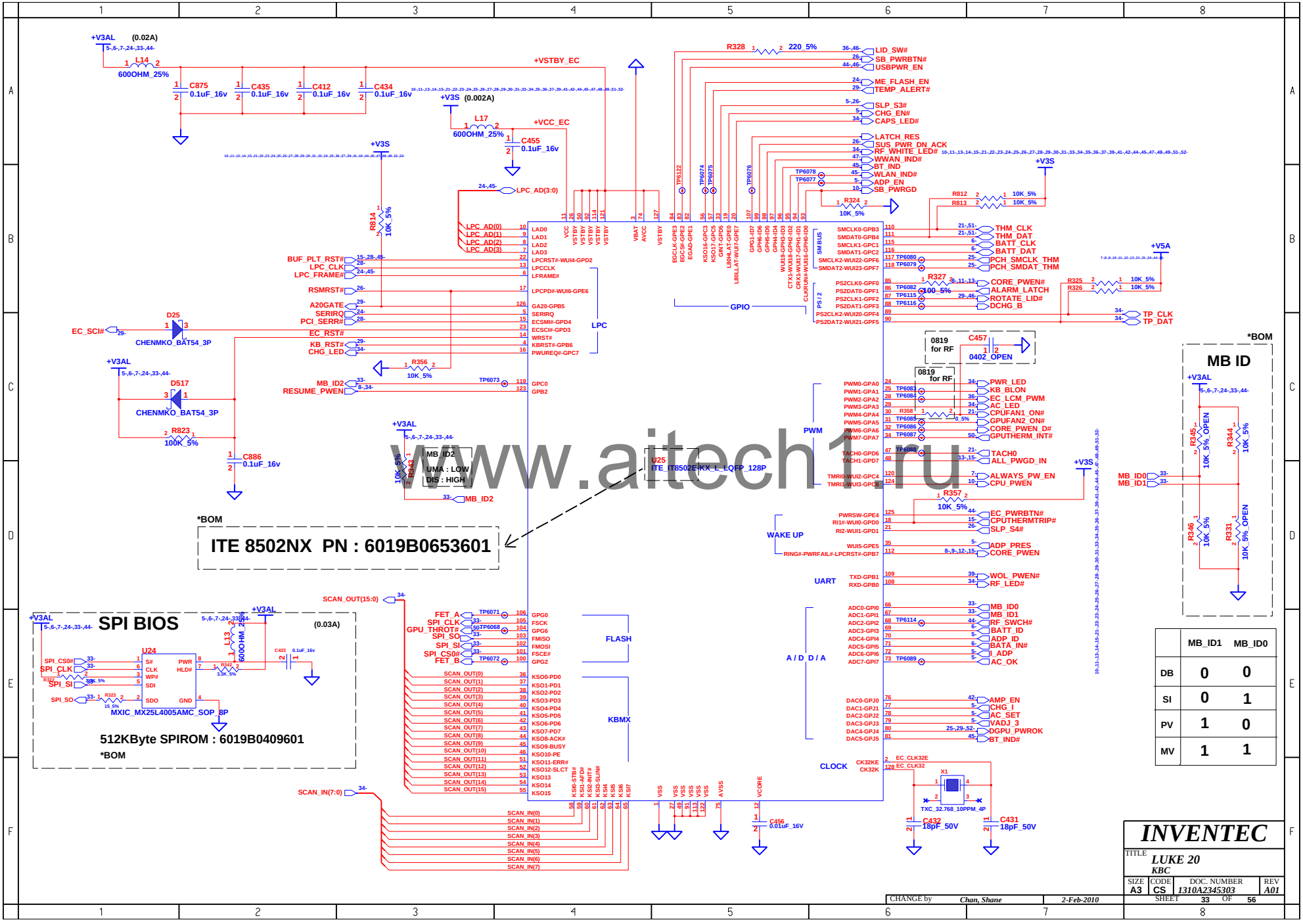

	MB_ID1	MB_ID0
DB	0	0
SI	0	1
PV	1	0
MV	1	1

www.aitech1.ru

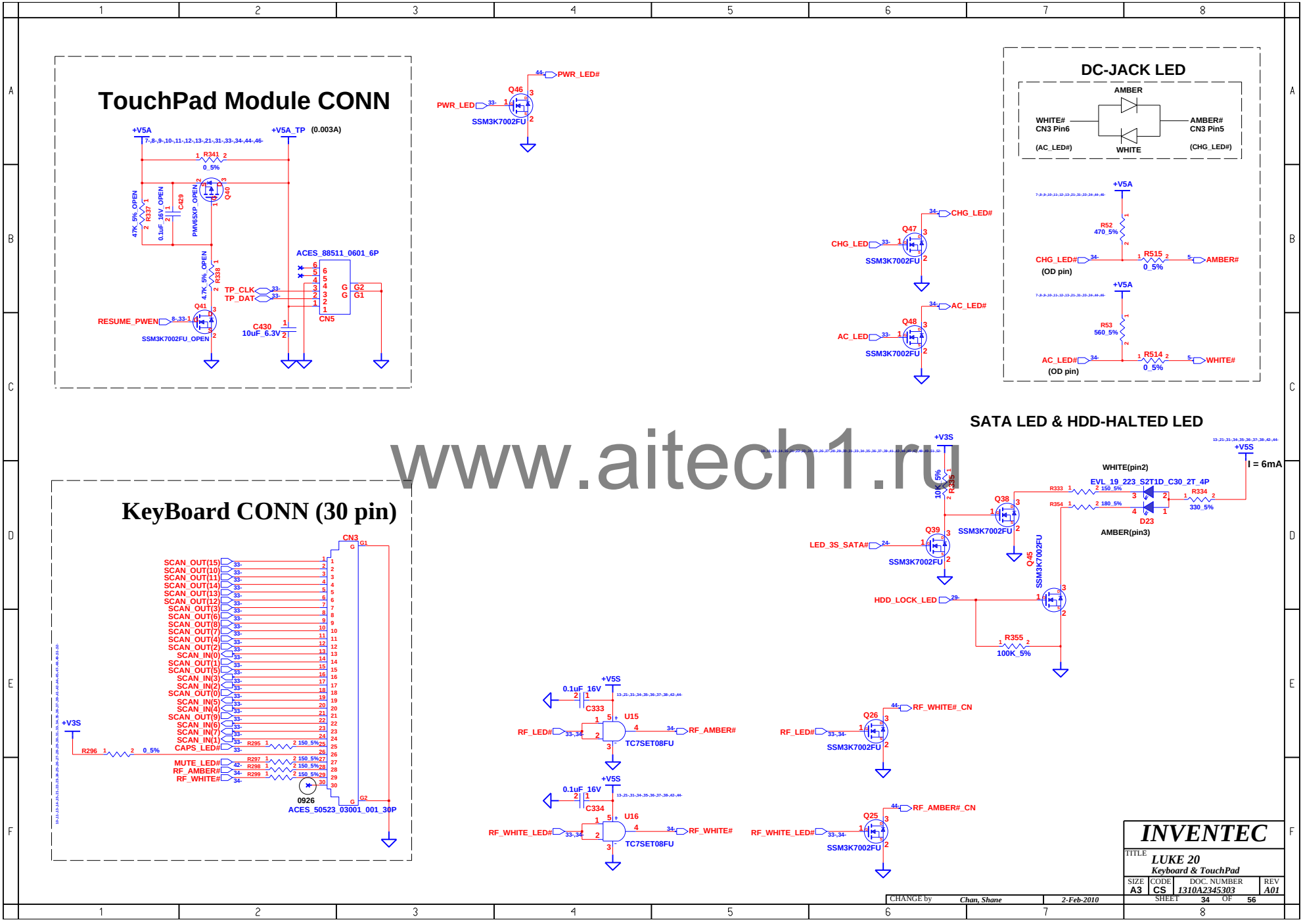

www.aitech1.ru

Discrete mode ONLY

DGPU_SELECT#	S1	S2
L	ON	OFF
H	OFF	ON

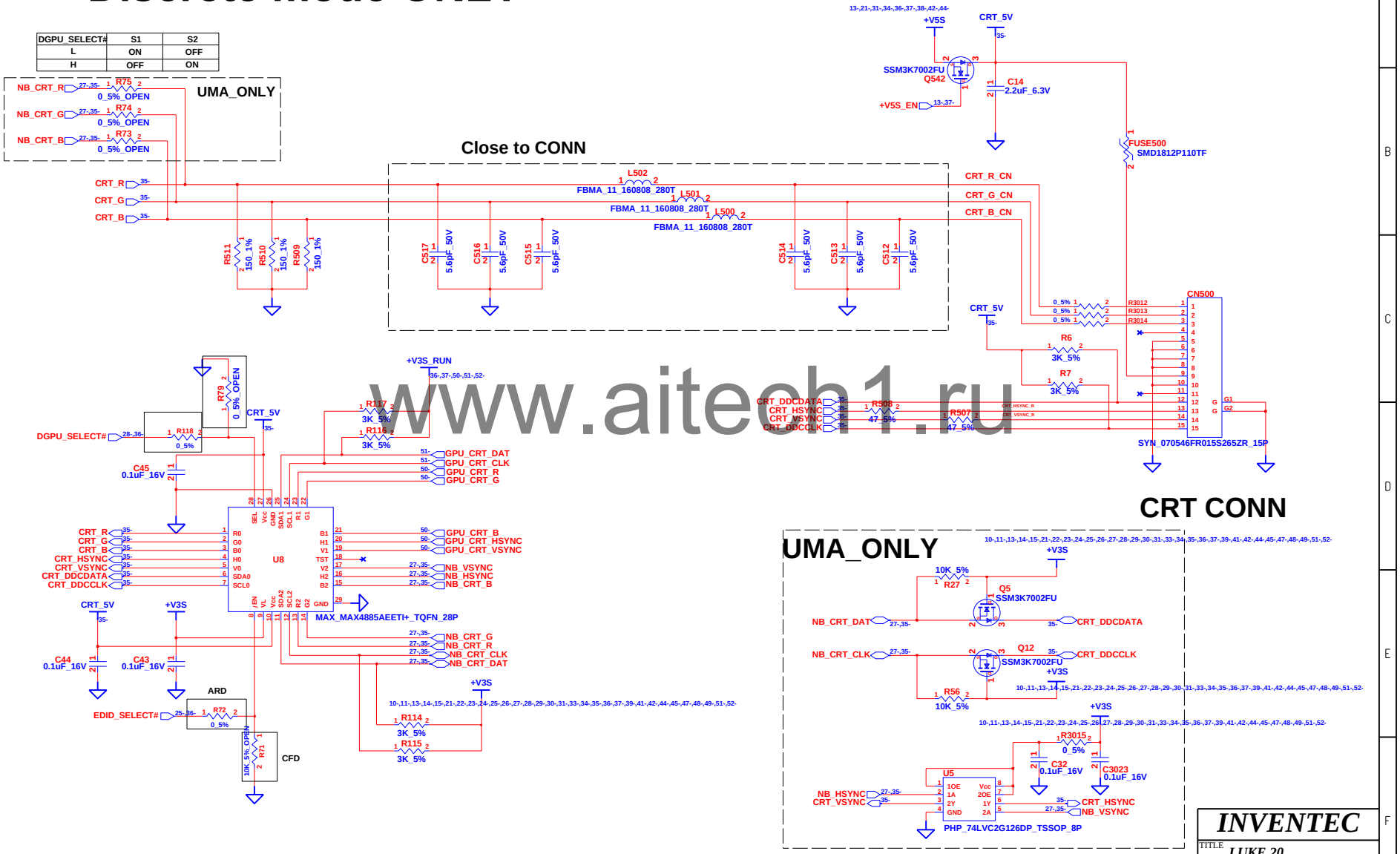

www.aitech1.ru

INVENTEC

TITLE LUKE 20 CRT

SIZE	CODE	DOC. NUMBER	REV
A3	CS	1310A2345303	A01

CHANGE by Chan, Shane 2-Feb-2010

SHEET 35 OF 56

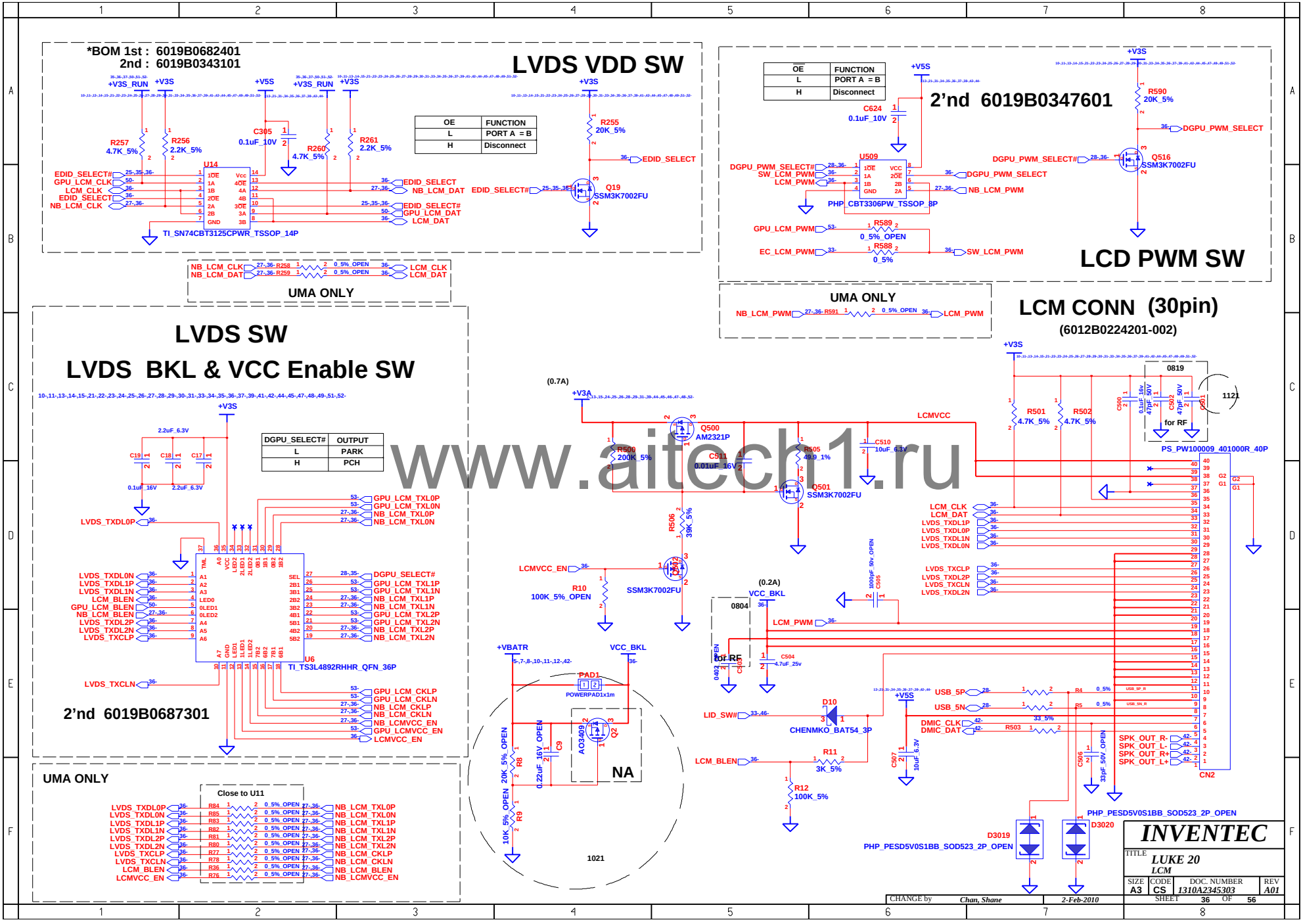

www.aitech1.ru

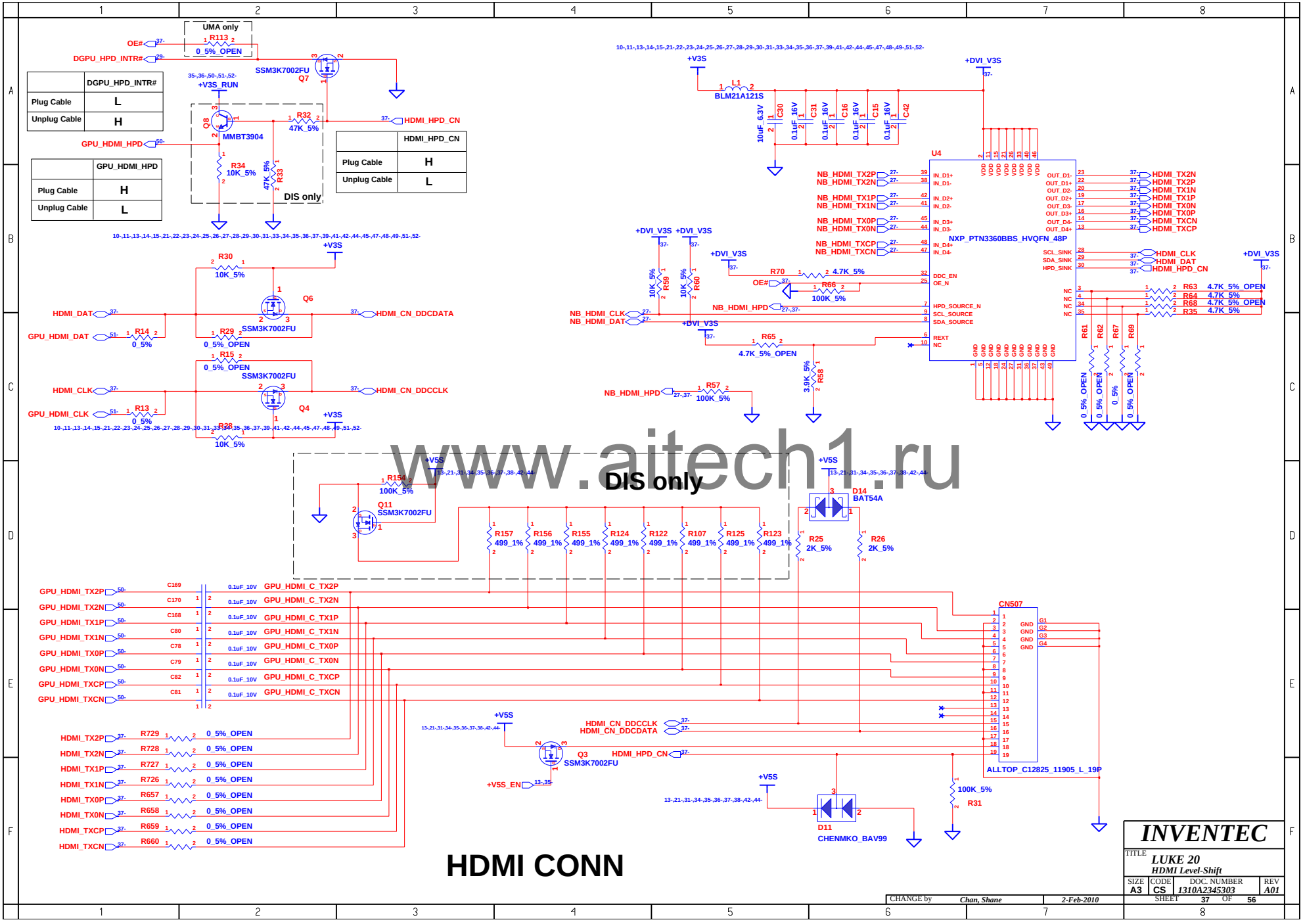

www.aitech1.ru

HDD Board

HDD CONN

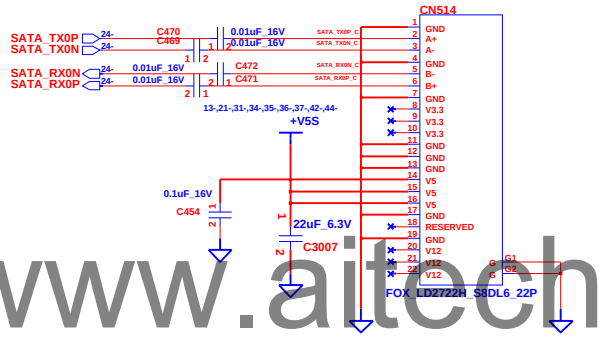

www.aitech1.ru

ESD DAUGHTER Board

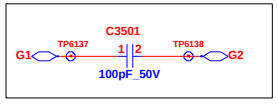

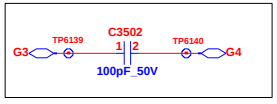

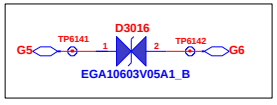

CHANGE by	Chan, Shane	2-Feb-2010	

INVENTEC

TITLE *LUKE 20*
SATA HDD & ODD

SIZE	CODE	DOC. NUMBER	REV
A3	CS	1310A2345303	A01

SHEET 38 OF 56

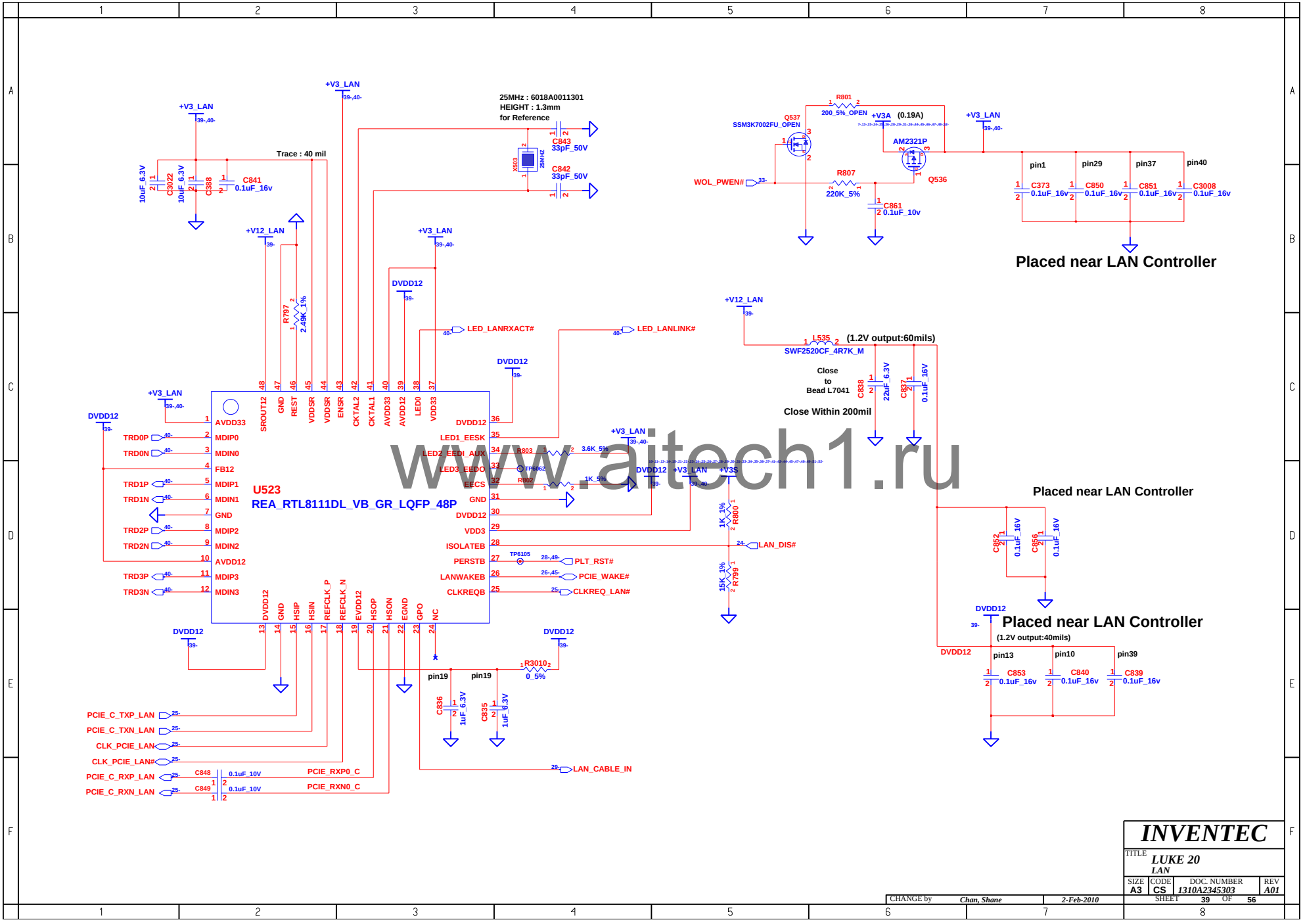

www.aitech1.ru

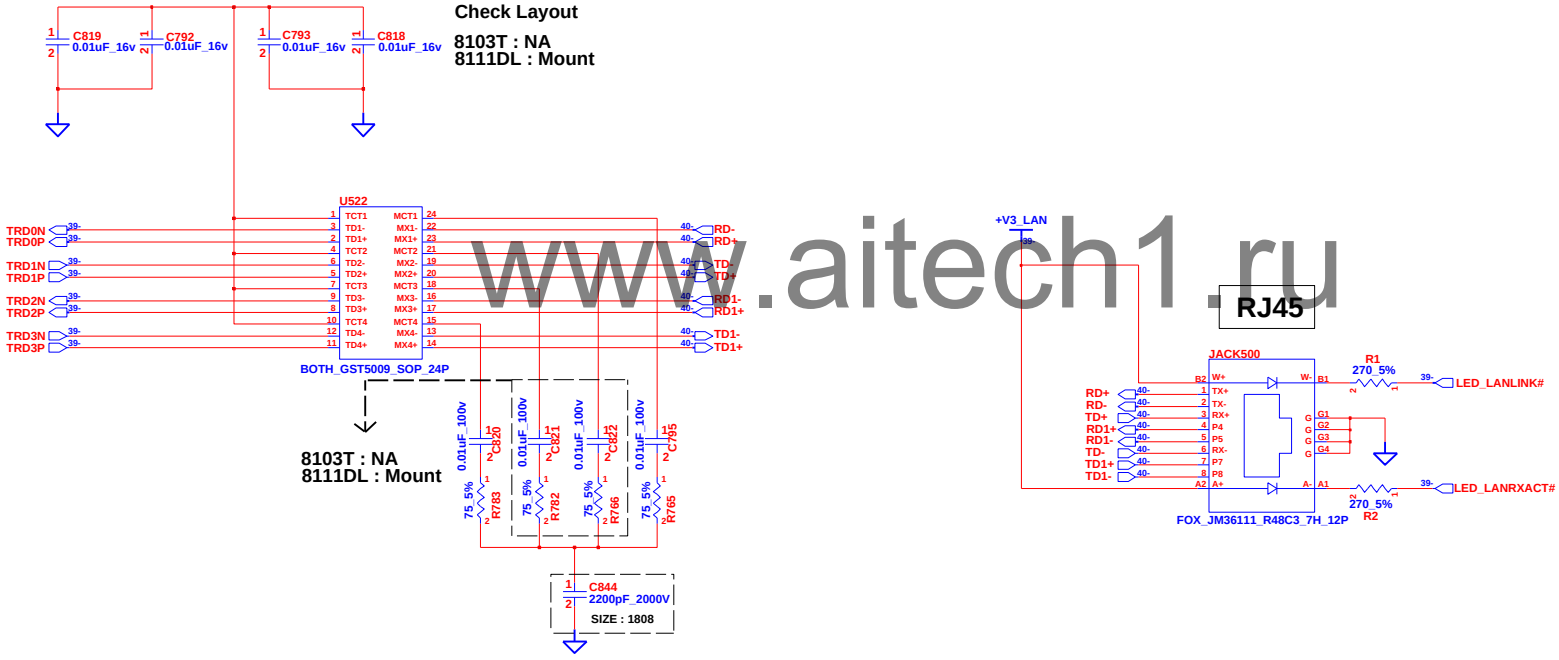

www.aitech1.ru

LAYOUT NOTE : Place termination resistors and caps as close to LAN controller as possible

CHANGE by	Chan, Shane	2-Feb-2010	

INVENTEC

TITLE *LUKE 20*
RJ-45

SIZE	CODE	DOC. NUMBER	REV
A3	CS	1310A2345303	A01

SHEET 40 OF 56

Card Reader CONN

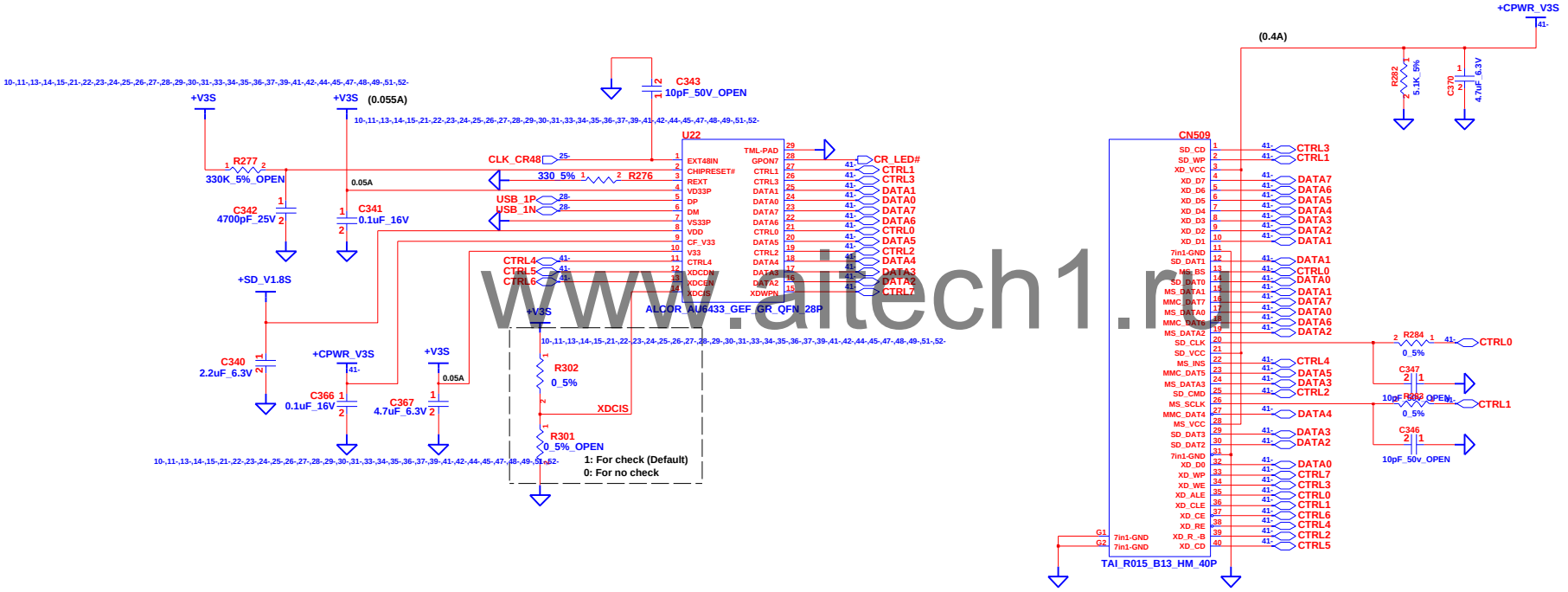

www.aitech1.ru

INVENTEC			
TITLE: LUKE 20 Card Reader			
SIZE A3	CODE CS	DOC. NUMBER 1310A2345303	REV A01
CHANGE by Chan, Shane	2-Feb-2010	SHEET 41 OF 56	

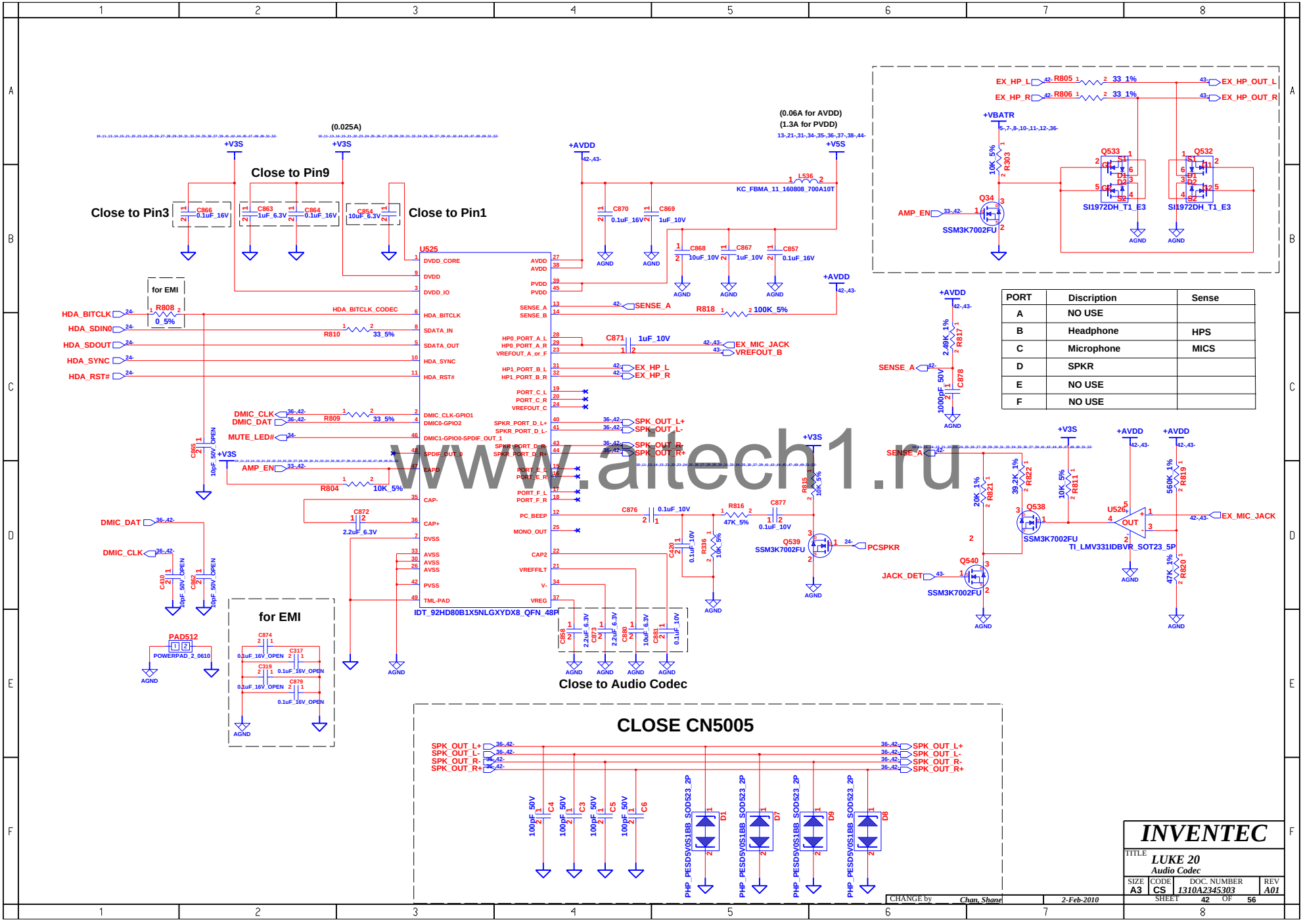

PORT	Discription	Sense
A	NO USE	
B	Headphone	HPS
C	Microphone	MICS
D	SPKR	
E	NO USE	
F	NO USE	

www.aitech1.ru

INVENTEC

TITLE: LUKE 20 Audio Codec

SIZE	CODE	DOC. NUMBER	REV
A3	CS	1310A2345303	A01

CHANGE by: Chan, Shane — 2-Feb-2010

SHEET 42 OF 56

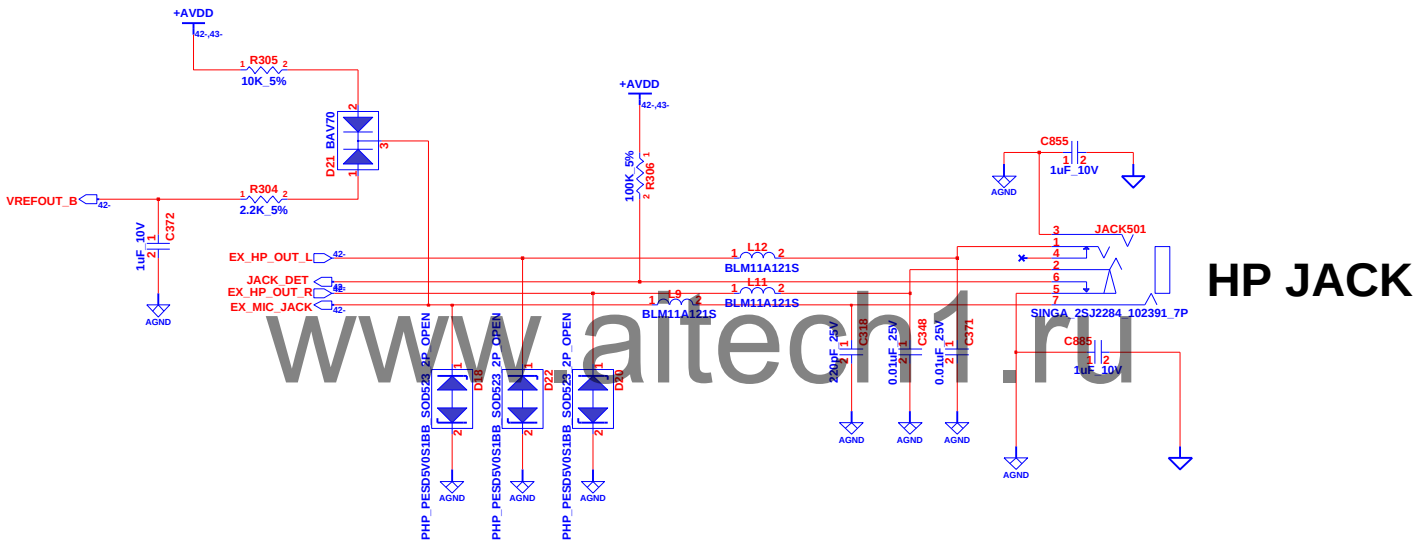

HP JACK

www.aitech1.ru

CHANGE by	Chan, Shane	2-Feb-2010	

INVENTEC

TITLE
LUKE 20
HP JACK & MIC JACK

SIZE	CODE	DOC. NUMBER	REV
A3	CS	1310A2345303	A01

SHEET 43 OF 56

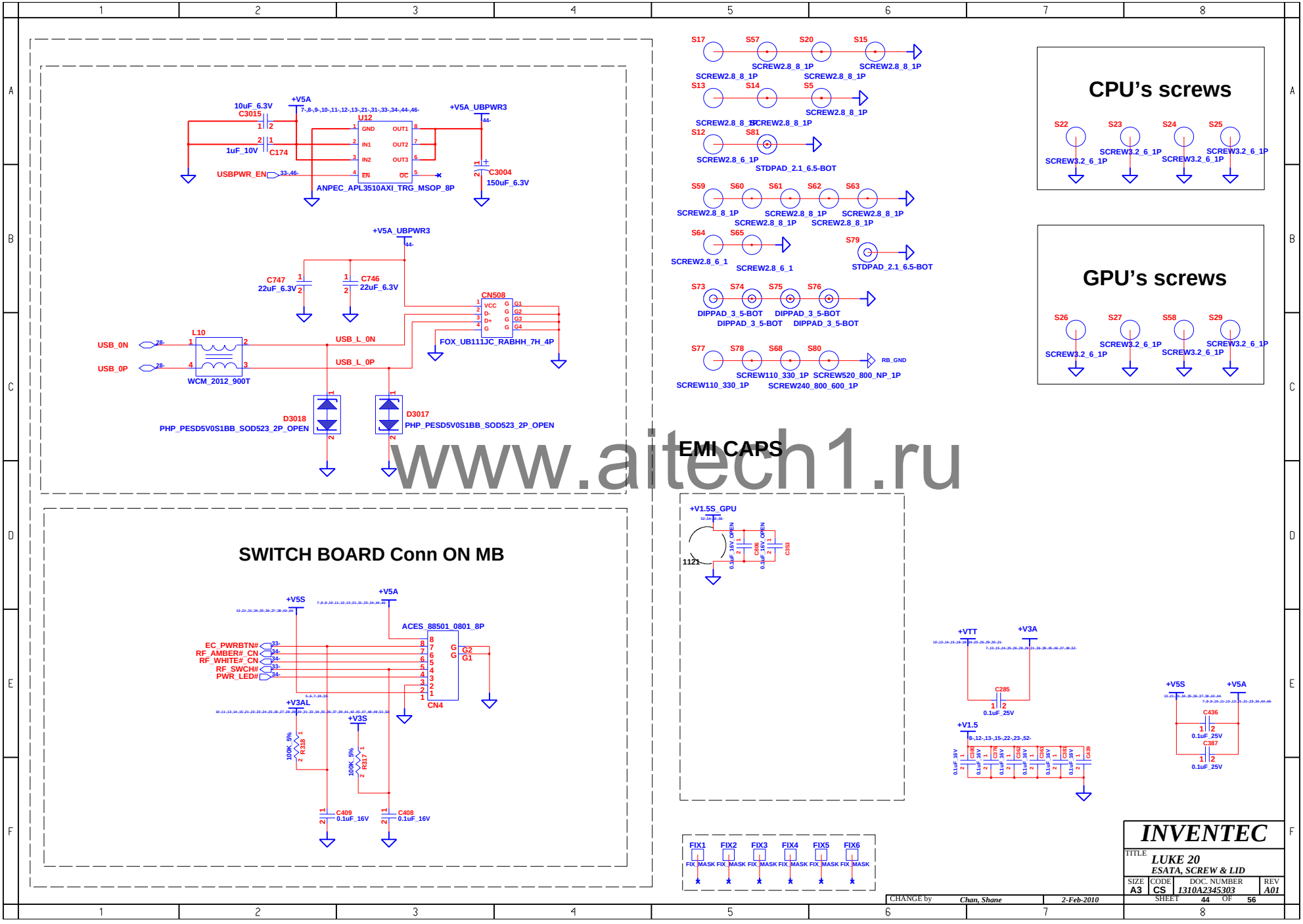

www.aitech1.ru

CHANGE by	Chan, Shane	2-Feb-2010	

INVENTEC

TITLE: *LUKE 20*
ESATA, SCREW & LID

SIZE	CODE	DOC. NUMBER	REV
A3	CS	1310A2345303	A01

SHEET 44 OF 56

BLUETOOTH CONN

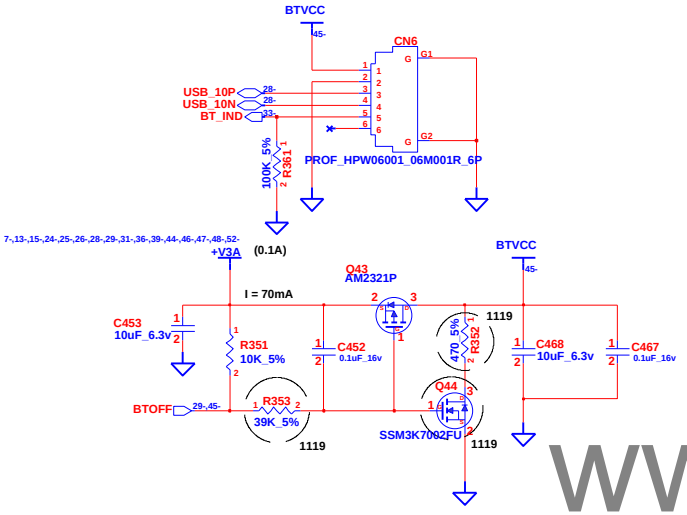

WLAN CONN (MINICARD)

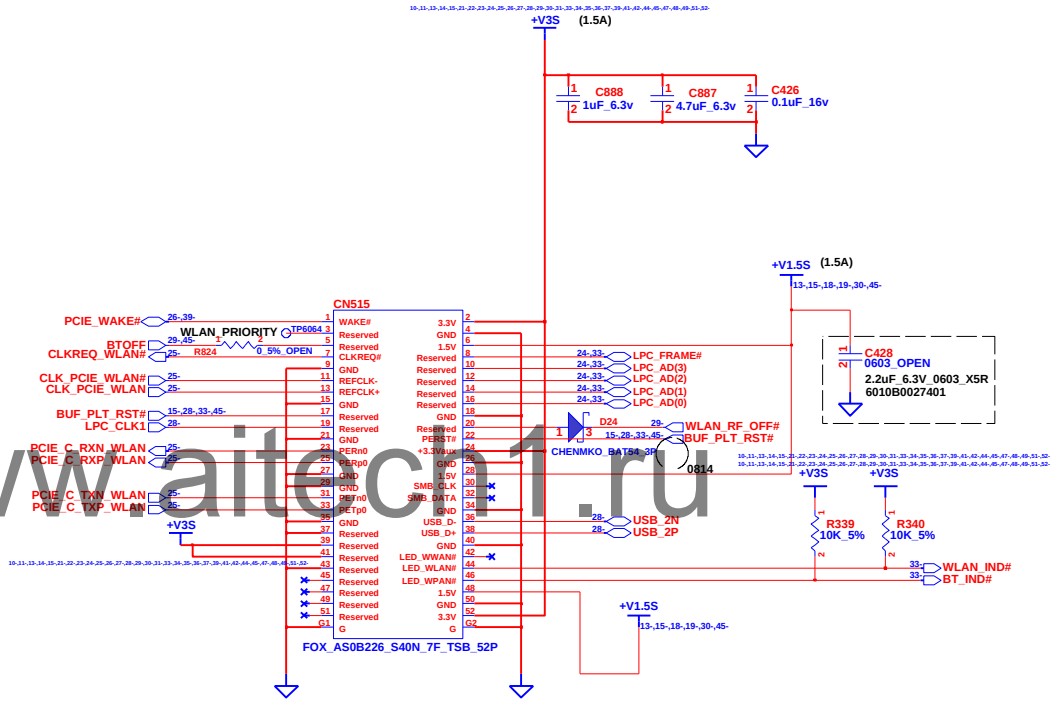

www.aitech1.ru

	PCH	SB800\820
WLAN_RF_OFF#	GPIO57	GPIO12
WLAN_POWER_OFF	GPIO35	GPIO176

CHANGE by	Chan, Shane	2-Feb-2010	

INVENTEC

TITLE: *LUKE 20*
WLAN, BT & WebCAM

SIZE	CODE	DOC. NUMBER	REV
A3	CS	1310A2345303	A01

SHEET 45 OF 56

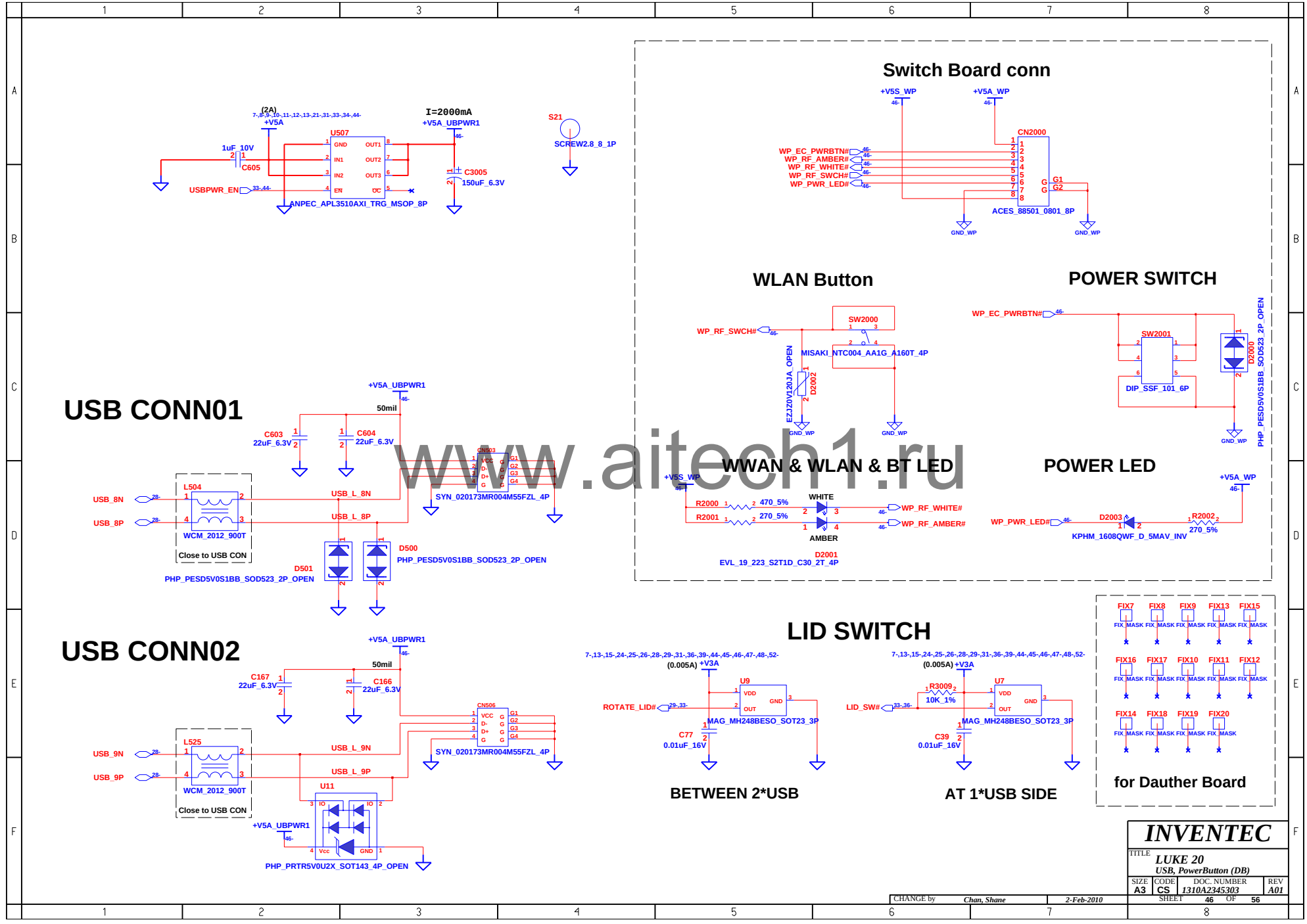

www.aitech1.ru

OPTION PART

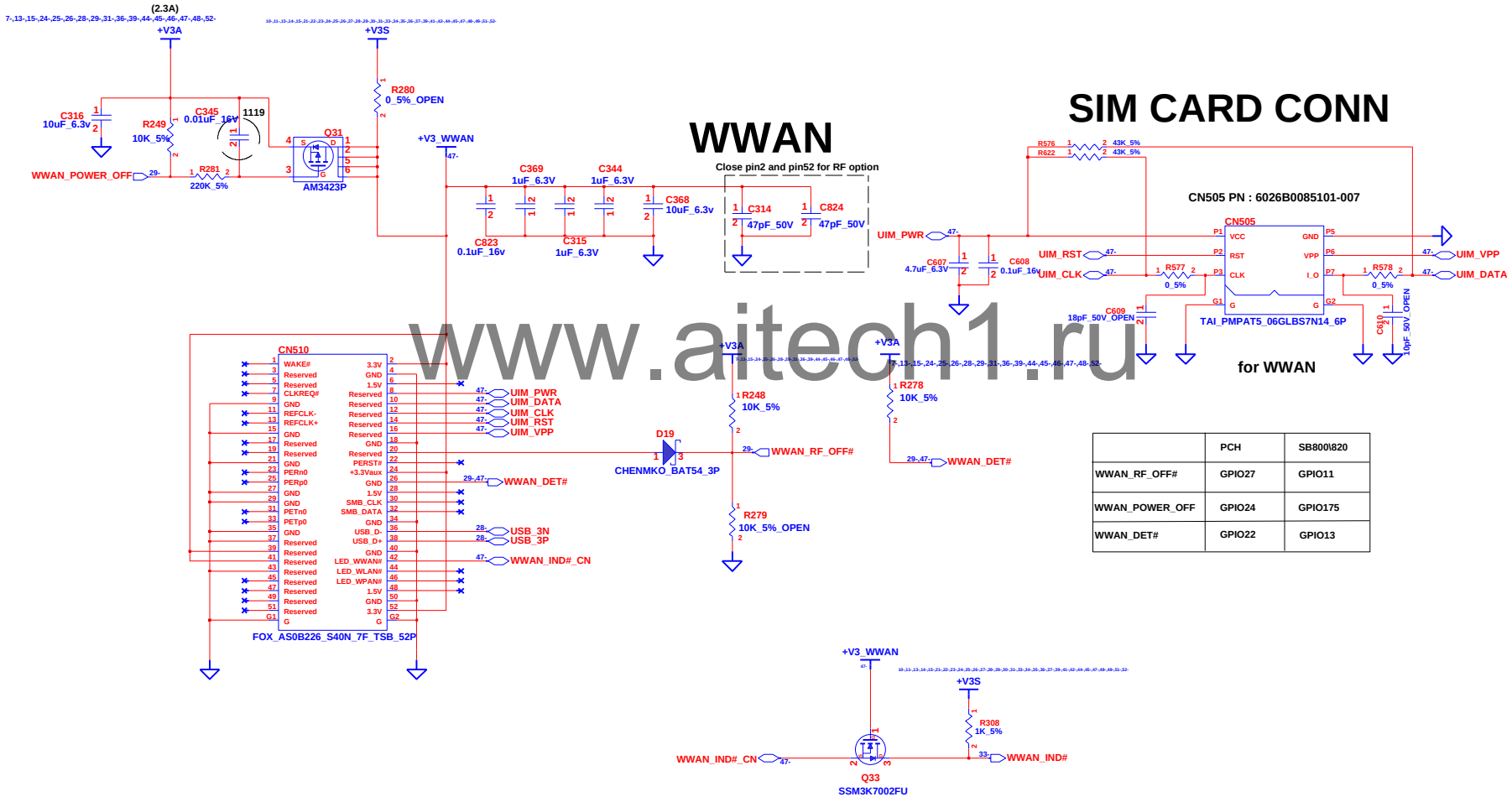

	PCH	SB800\820
WWAN_RF_OFF#	GPIO27	GPIO11
WWAN_POWER_OFF	GPIO24	GPIO175
WWAN_DET#	GPIO22	GPIO13

www.aitech1.ru

INVENTEC

TITLE: LUKE 20 WWAN(Option)

SIZE	CODE	DOC. NUMBER	REV
A3	CS	1310A2345303	A01

SHEET 47 OF 56

CHANGE by Chan, Shane 2-Feb-2010

Rotate Button board

Rotate Button board conn

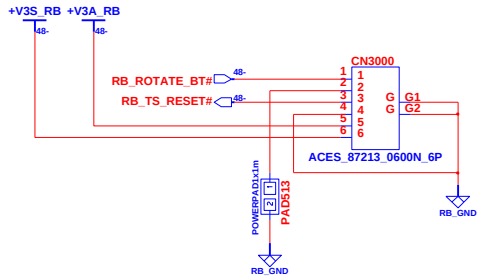

TOUCH SCREEN

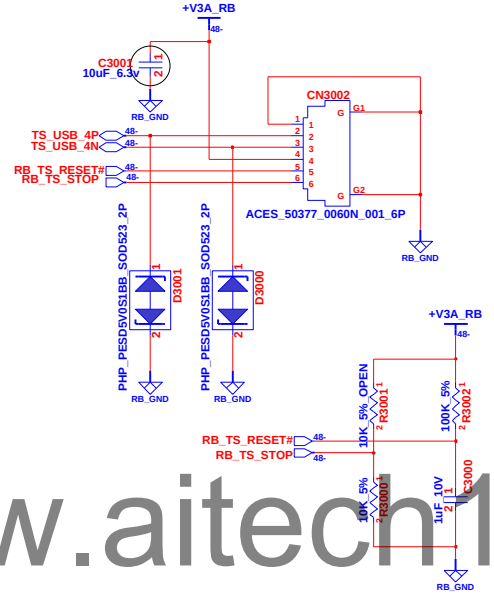

FINGER PRINT

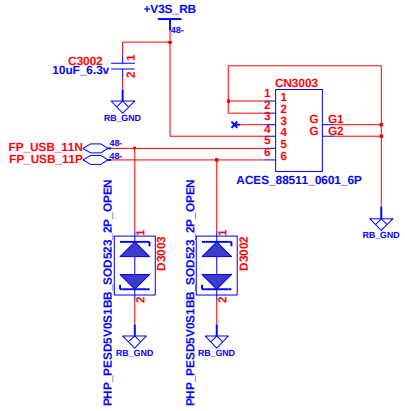

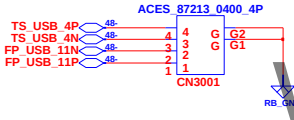

Rotate Button

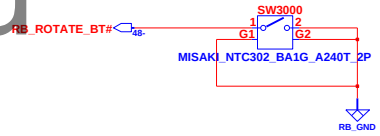

www.aitech1.ru

Rotate Button board conn ON MB

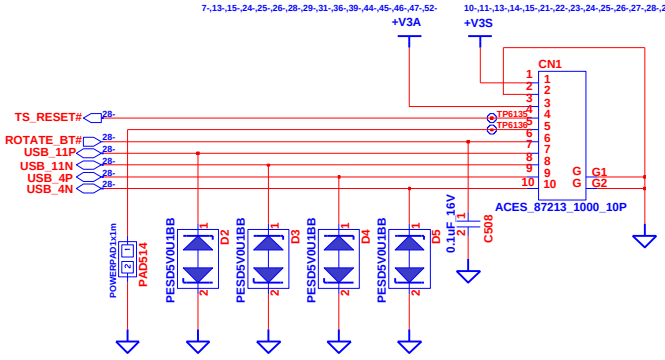

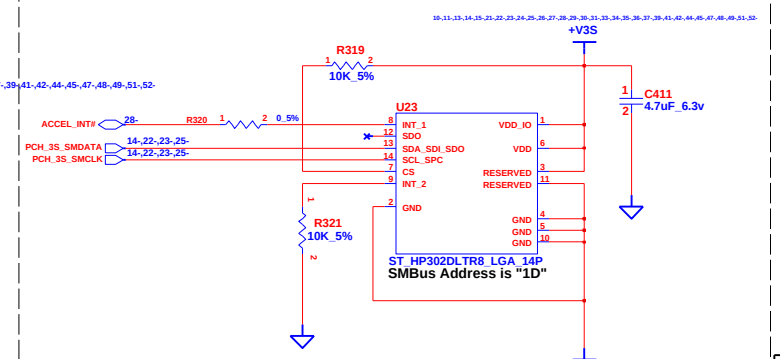

HARDDRIVE PROTECTION
P/N = 6019B0505201

INVENTEC			
TITLE	LUKE 20 Touchscreen, FP & HD LOCK(Option)		
SIZE A3	CODE CS	DOC. NUMBER 1310A2345303	REV A01
CHANGE by Chan, Shane	2-Feb-2010	SHEET 48 OF 56	

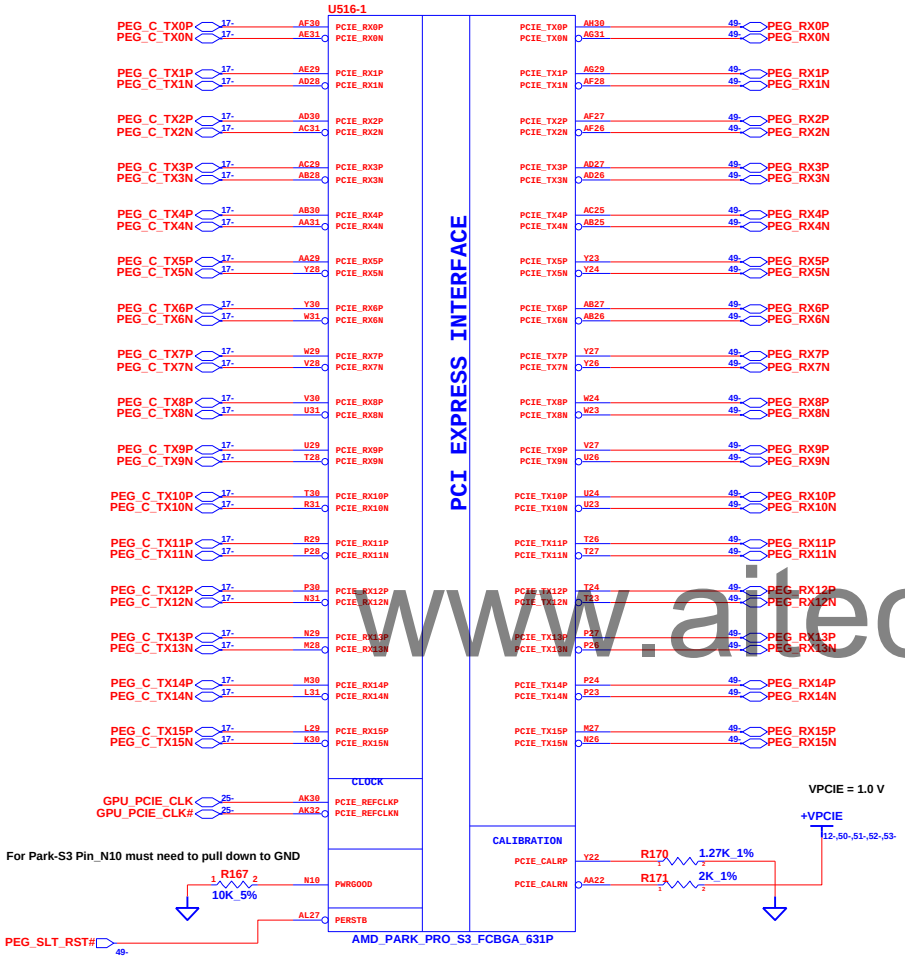

Close to GPU

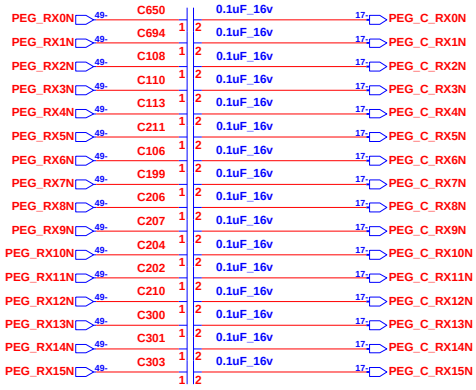

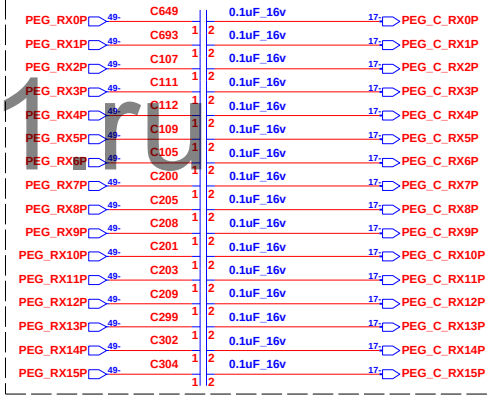

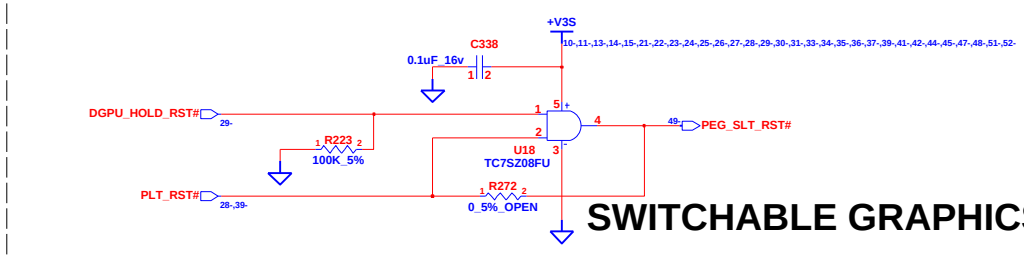

SWITCHABLE GRAPHICS

www.aitech1.ru

INVENTEC			
TITLE LUKE 20			
SIZE A3	CODE CS	DOC. NUMBER 1310A2345303	REV A01
CHANGE by Chan, Shane	2-Feb-2010	SHEET 49 OF 56	

MEM_ID3	MEM_ID2	(R168) MEM_ID1	(R165) MEM_ID0	vendor
0	0	1	1	hynix (512MB)
0	0	0	1	Samsung(512MB) (Default)

STRAPS	PIN	Description of default settings
TX_PWRS_ENB	GPIO0	PCIE full TX output swing.
TX_DEEMPH_EN	GPIO1	PCIE transmitter de-emphasis enabled.
BIF_GEN2_EN_A	GPIO2	PCIE GEN2 enabled
BIF_DEBUG_ACCESS	GPIO4	Debug signals muxed out.
	GPIO7_BLON	Control Backlight On / Off
BIF_VGA_DIS	GPIO9	VGA ENABLED
ROMIDCFG(2:0)	GPIO[13:11]	Memory aperture size select.

If GPIO_22_EN = 0 , then GPIO[13:11] defines the primary memory aperture size.

GPIO_13	GPIO_12	GPIO_11	Memory aperture size
0	0	1	512MB / 256MB (Default)
1	1	0	reserved

POW_SW1	POW_SW0	+VDDC_GPU	Rtop	Rbot
0	0	1.1V	R127	R128//R129
0	1	1.05V	R127	R128
1	0	0.95V	R127//R126	R128//R129
1	1	0.9V	R127//R126	R128

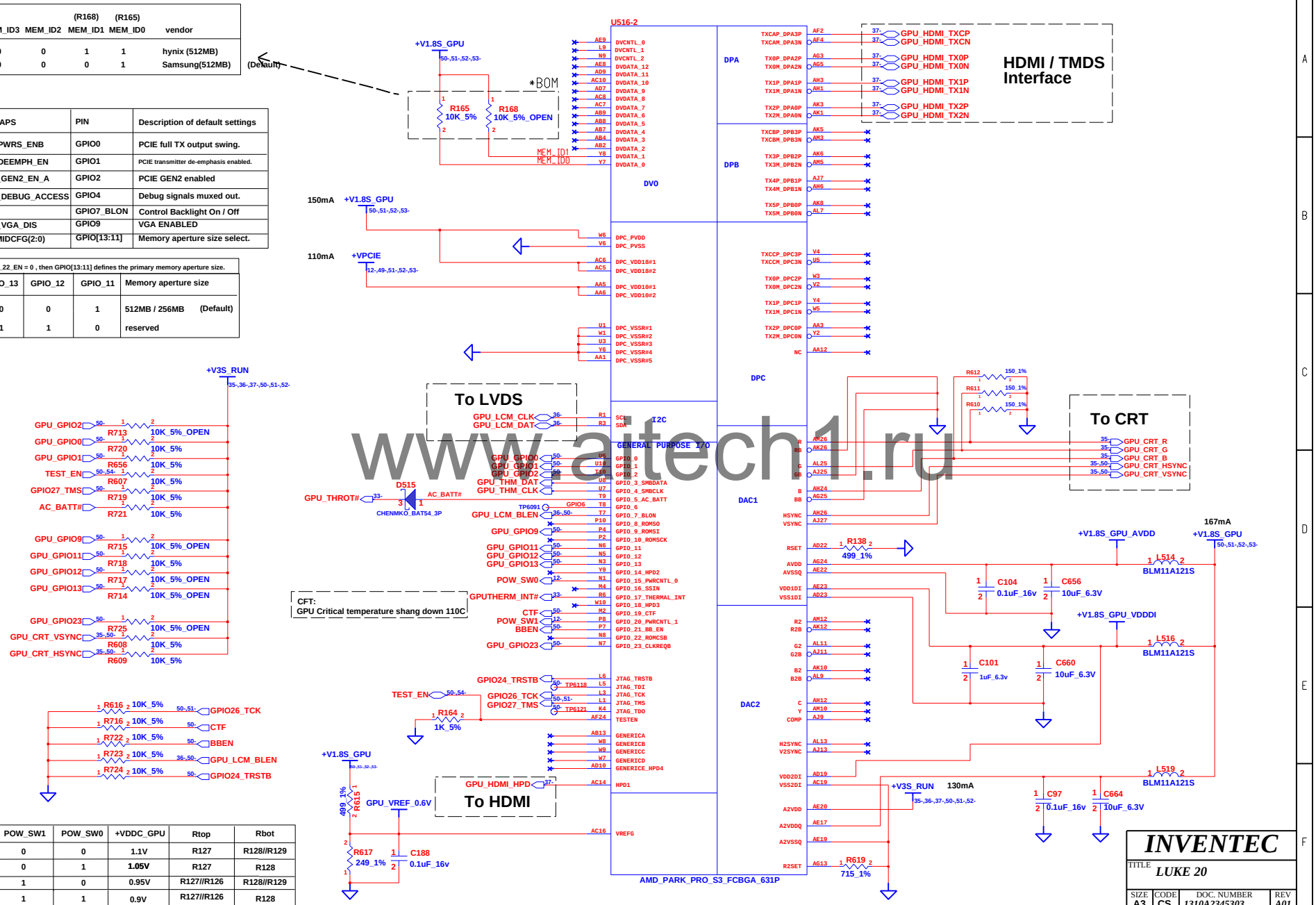

www.aitech1.ru

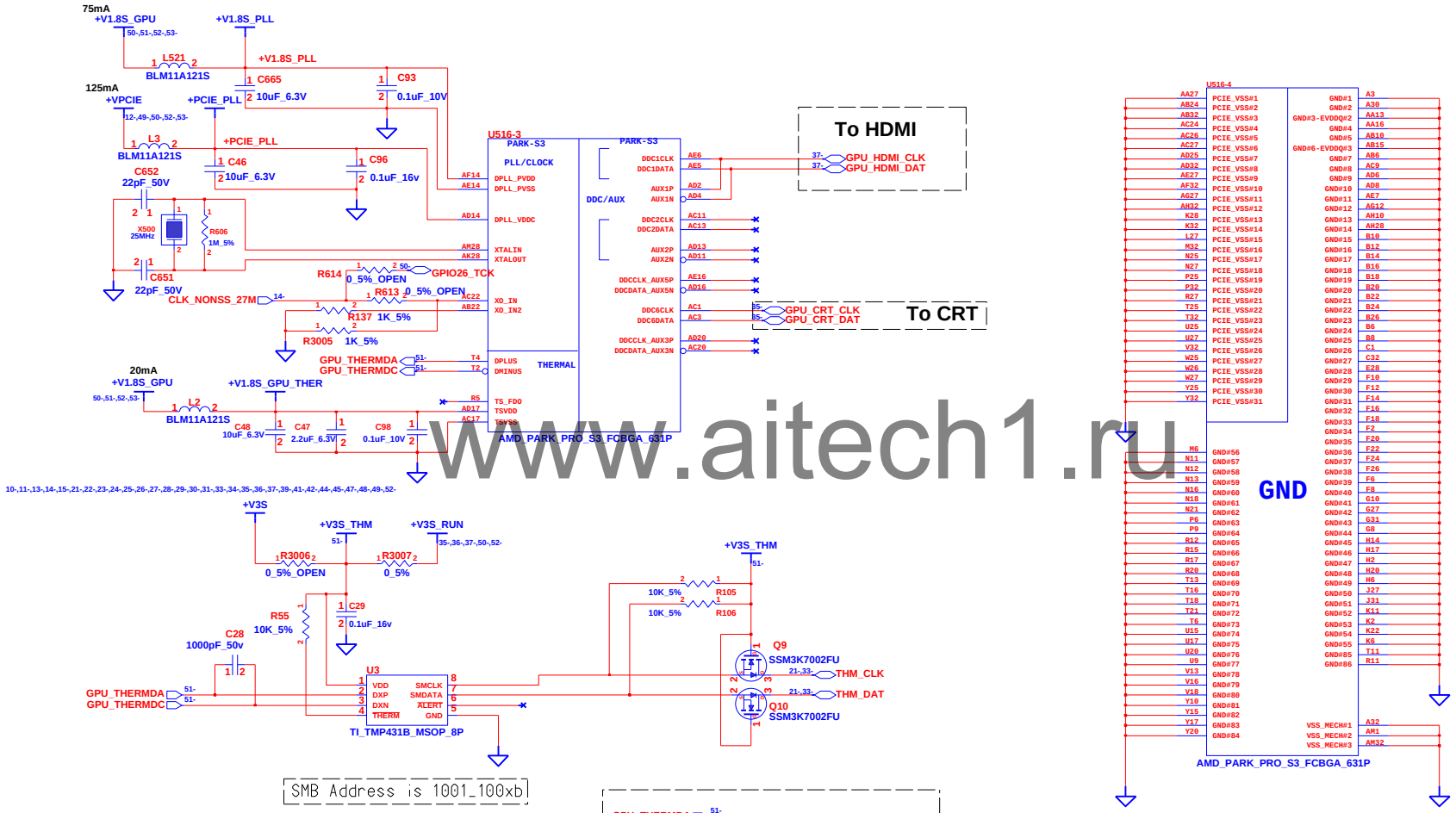

www.aitech1.ru

CHANGE by	Chan, Shane	2-Feb-2010	

INVENTEC

TITLE: *LUKE 20*

SIZE	CODE	DOC. NUMBER	REV
A3	CS	1310A2345303	A01

SHEET 51 OF 56

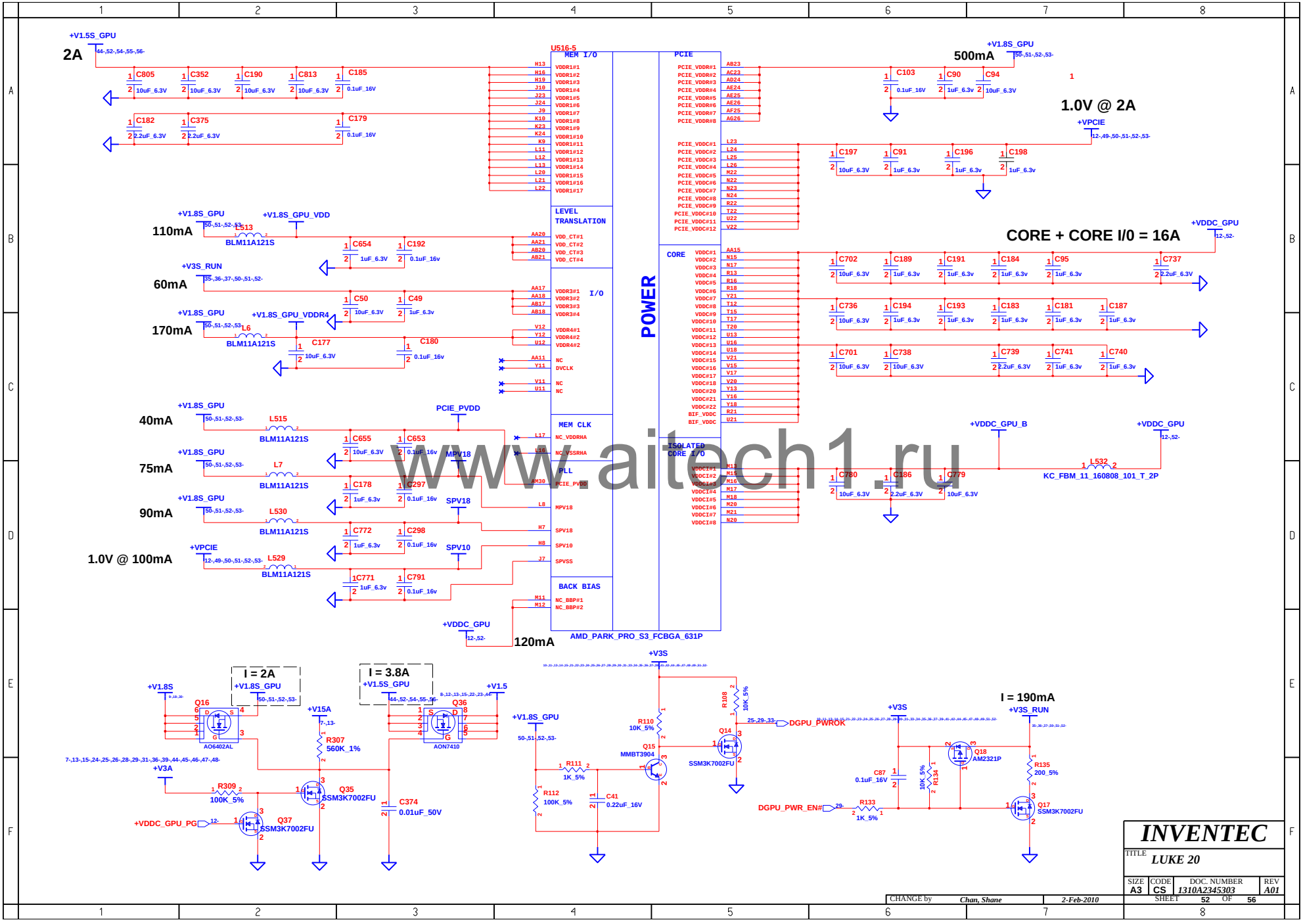

www.aitech1.ru

INVENTEC

TITLE LUKE 20

SIZE	CODE	DOC. NUMBER	REV
A3	CS	1310A2345303	A01

SHEET 52 OF 56

CHANGE by Chan, Shane 2-Feb-2010

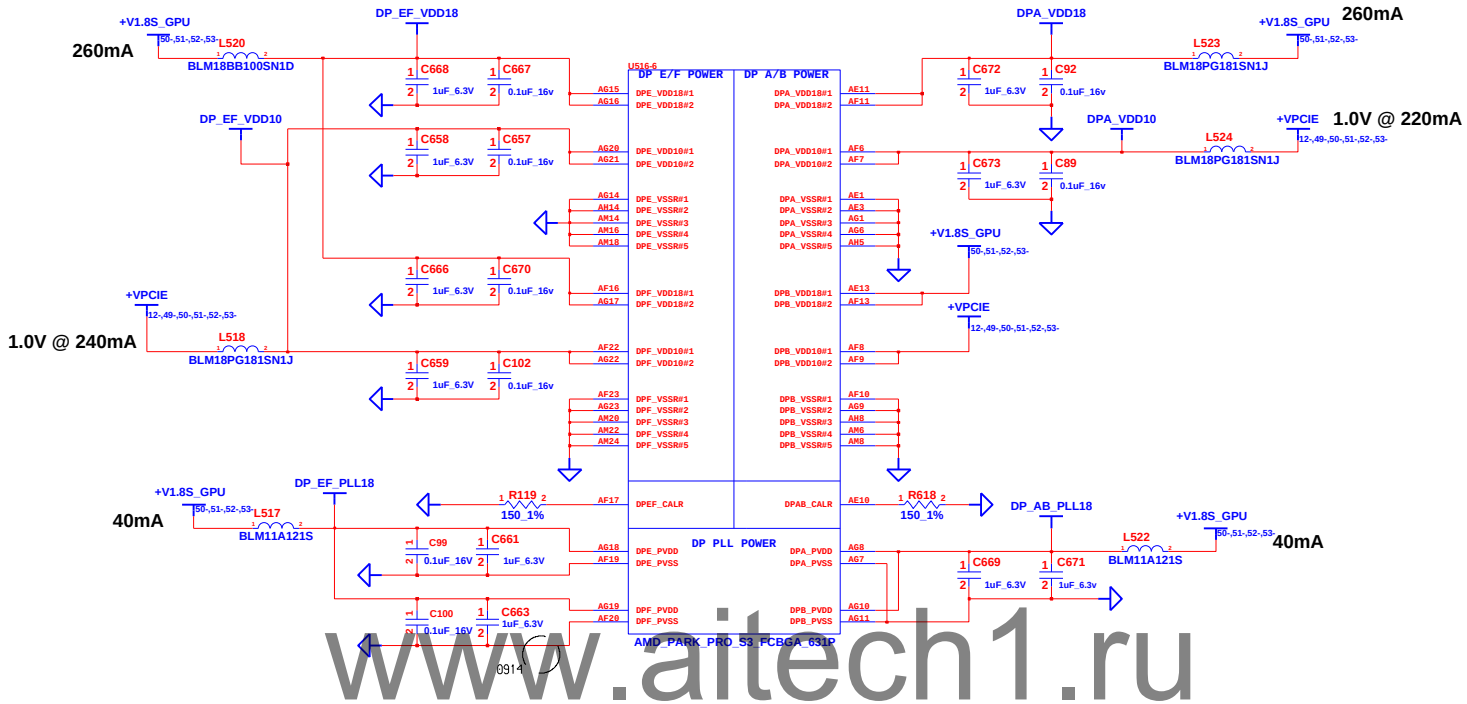

www.aitech1.ru

LVDS Interface

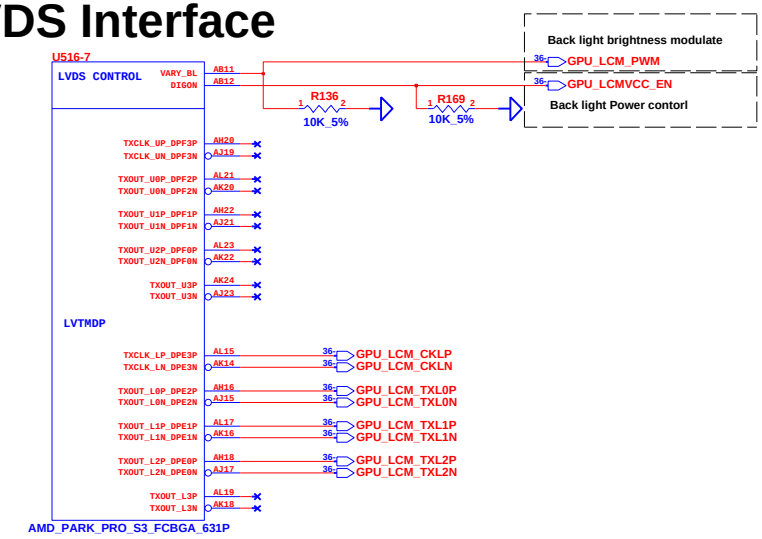

INVENTEC			
TITLE LUKE 20			
SIZE A3	CODE CS	DOC. NUMBER 1310A2345303	REV A01
CHANGE by Chan, Shane	2-Feb-2010	SHEET 53 OF 56	

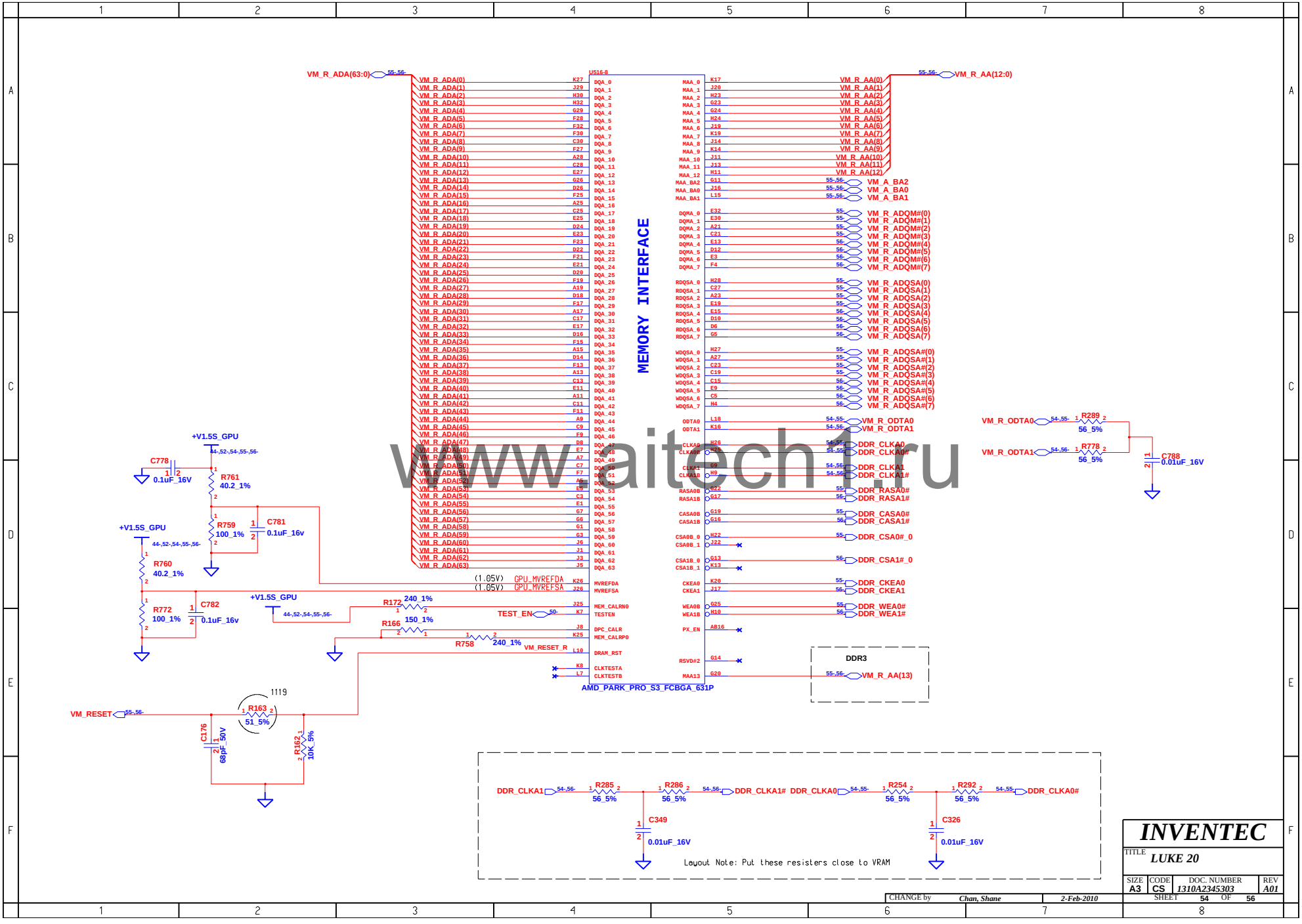

www.aitech.ru

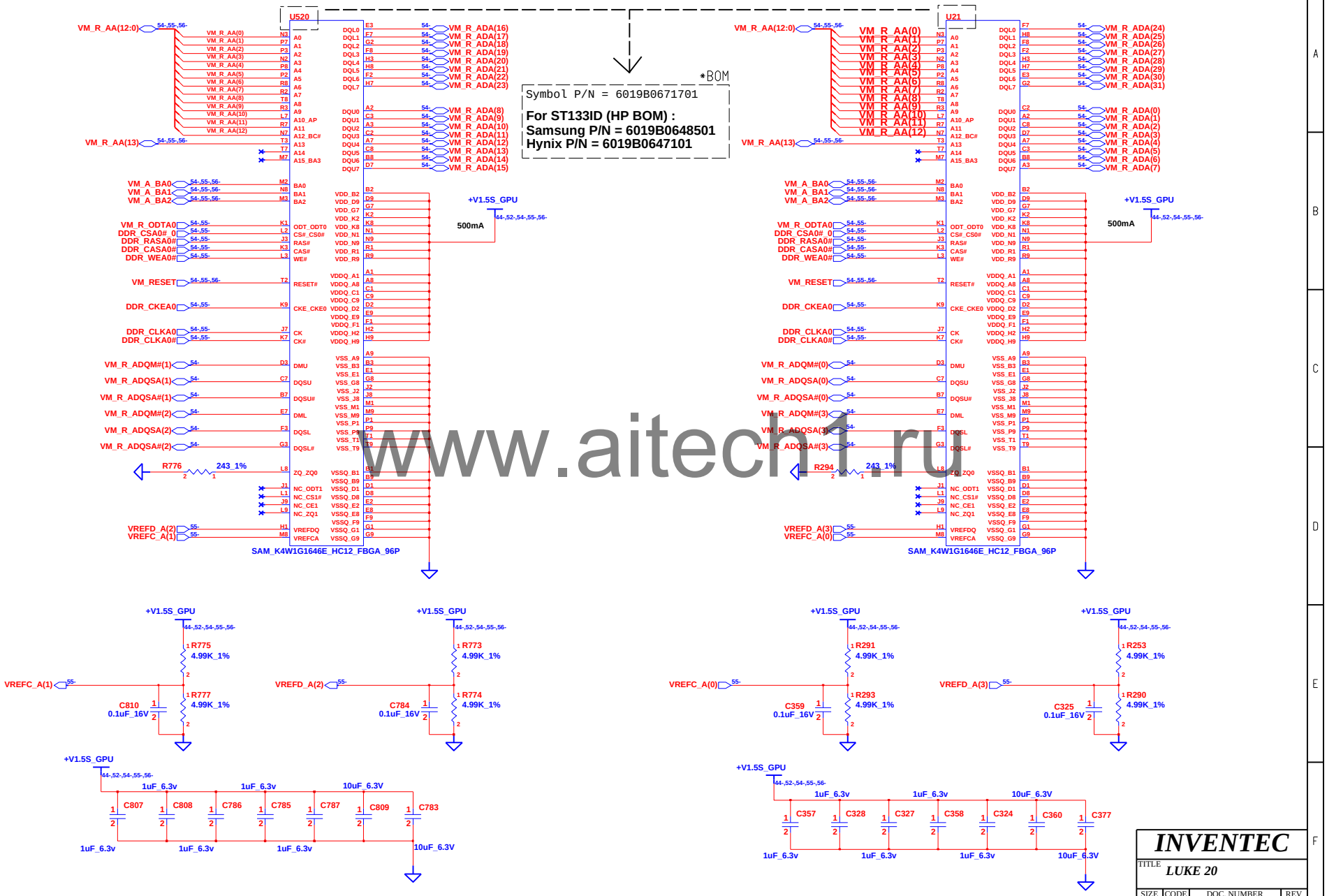

www.aitech.ru

CHANGE by	Chan, Shane	2-Feb-2010	

INVENTEC

TITLE: *LUKE 20*

SIZE	CODE	DOC. NUMBER	REV
A3	CS	1310A2345303	A01

SHEET 55 OF 56

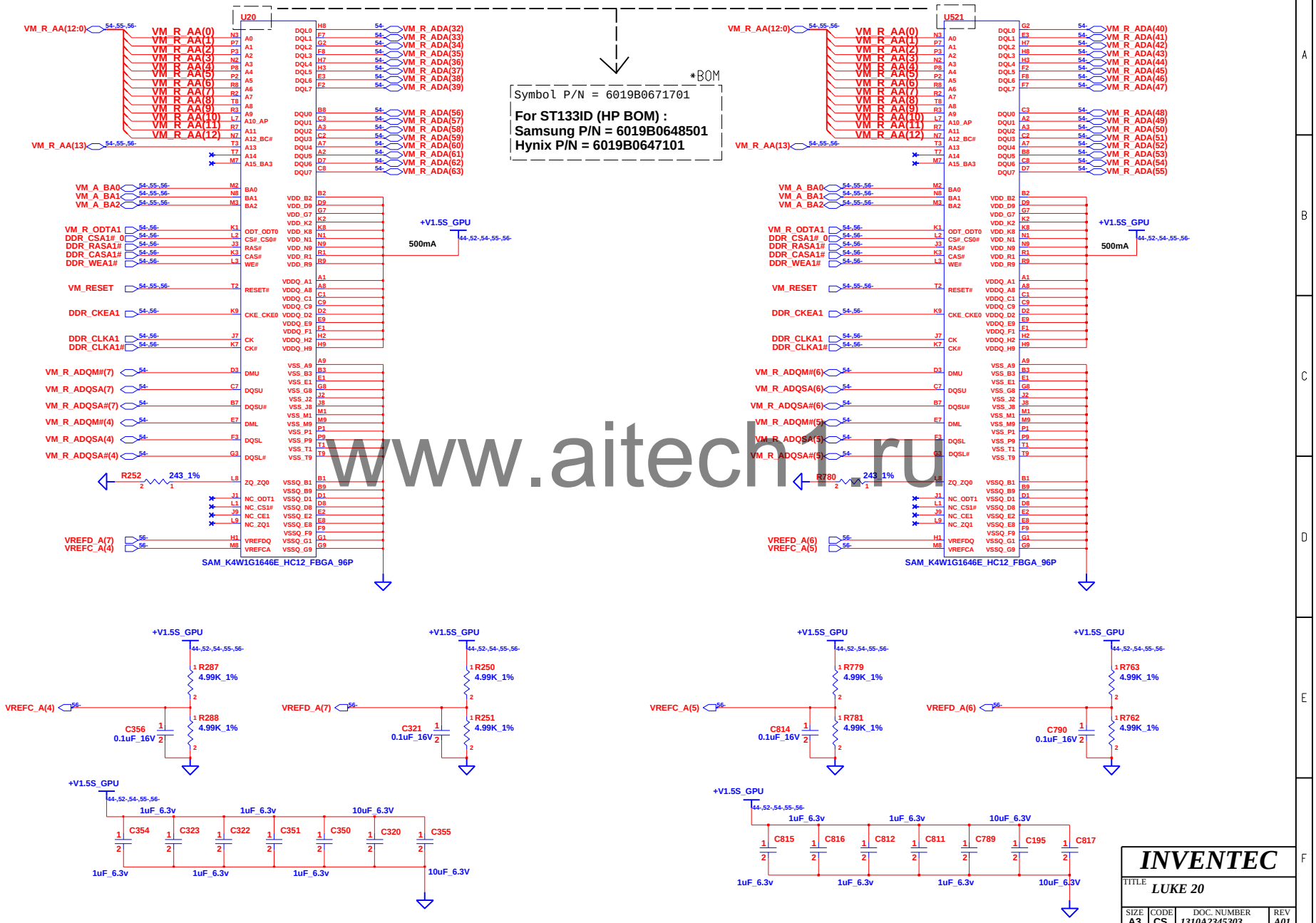

www.aitech.ru

INVENTEC

TITLE LUKE 20

SIZE	CODE	DOC. NUMBER	REV
A3	CS	1310A2345303	A01

SHEET 56 OF 56

CHANGE by Chan, Shane 2-Feb-2010